PUBLICATIONS MATHÉMATIQUES DE L'I.H.É.S.

RODRIGO BAMON
RAFAEL LABARCA
RICARDO MAÑÉ
MARIA-JOSÉ PACÍFICO

The explosion of singular cycles

Publications mathématiques de l'I.H.É.S., tome 78 (1993), p. 207-232
<http://www.numdam.org/item?id=PMIHES_1993__78__207_0>

© Publications mathématiques de l'I.H.É.S., 1993, tous droits réservés.

L'accès aux archives de la revue « Publications mathématiques de l'I.H.É.S. » (http://www.ihes.fr/IHES/Publications/Publications.html) implique l'accord avec les conditions générales d'utilisation (http://www.numdam.org/conditions). Toute utilisation commerciale ou impression systématique est constitutive d'une infraction pénale. Toute copie ou impression de ce fichier doit contenir la présente mention de copyright.

NUMDAM
Article numérisé dans le cadre du programme
Numérisation de documents anciens mathématiques
http://www.numdam.org/

THE EXPLOSION OF SINGULAR CYCLES

by RODRIGO BAMÓN (1), RAFAEL LABARCA (2)
RICARDO MAÑÉ, MARÍA JOSÉ PACÍFICO

Introduction

The objective of this work is to introduce and analyze a new natural mechanism through which a vector field depending on a parameter may evolve, when the parameter varies, from a vector field exhibiting a very simple dynamical nature(say, having a finite chain recurrent set), into one exhibiting non trivial forms of recurrence.

For diffeomorphisms, the study of such mechanisms goes back to the work of Newhouse and Palis [NP1], where they considered one-parameter families of diffeomorphims and analyzed the dynamics of the diffeomorphisms corresponding to values of the parameter close to the first bifurcation parameter (i.e. the first value of the parameter for which the diffeomorphism is not Morse-Smale). After avowing the difficulties of proving which is the generic dynamics at the first bifurcation, they focused their research on the case when at the first bifurcation value the chain recurrent set of the diffeomorphism is the union of a finite set of hyperbolic periodic orbits and a *cycle* i.e. a finite family of hyperbolic periodic orbits linked, in a cyclic way by orbits contained in the intersections of stable and unstable manifolds of different periodic orbits of the family [NP2]. They conjectured a certain genericity of this property, to be recalled below. In that paper and afterwards in a joint work with Takens [NPT], the authors describe how the cycle explodes when the parameter increases. Explosion here means, as usual in this context, a sudden increase of the size of a relevant dynamically defined set (say, the non wandering set) triggered by a small perturbation of the sytem. Essentially, in [NP1], [NP2] and [NPT], a perturbation of the system leads to the creation of homoclinic tangencies and then to the vast array of phenomena they carry on their wake (Newhouse wild horseshoes, persistent tangencies, non hyperbolic attractors, etc.). Their research then moves to the natural question of how large are the set of parameters for which each one of these phenomena arise, and their main and more accurate results are in the case of diffeomorphisms of two dimensional manifolds [NP2], [NPT], [PT].

---

(1) Partially supported by Fondecyt 1059/89, Chile.
(2) Partially supported by Fondecyt, Chile and FAPERJ, Brazil.

For vector fields without singularities, a similarity with the case of diffeomorphisms of surfaces can be expected. But, when the cycle whose explosion gives birth to non trivial dynamical structures contains a singularity, new mechanisms, with no analogy with the case of diffeomorphisms of surfaces, arise.

The first such mechanism was studied by Afraimovic and Shilnikov in [AS], where they considered one-parameter families of vector fields on 3-dimensional manifolds that cross the boundary of the Morse-Smale region through the collision of two saddles producing a saddle-saddle singularity whose stable and unstable manifolds have transversal intersections. They analyse how, after crossing the boundary, this saddle-saddle self connection unfolds into non trivial hyperbolic sets that admit an accurate description in terms of Bernouilli shifts.

Our objective is the explosion of what we shall call *singular cycles*, i.e. cycles containing a *hyperbolic* singularity, and we shall describe how they explode in a way entirely different from that of the cycles of diffeomorphisms of surfaces or the Afraimovic-Shilnikov cycle. Through the explosion of such a cycle we enter a region largely filled by Axiom A flows, and in an important subcase, the non Axiom A flows that may appear are arranged in a codimension 1 lamination of the space of vector fields, having small Hausdorff dimension, and where each leaf of the lamination is characterized as a class of topologically equivalent vector fields, whose dynamics is a generalization of the Lorenz-Guckenheimer-Williams attractor [GW] and the Labarca-Pacífico [LP] singular horseshoe.

Let us now give the precise statements of our results. Let M be a compact and boundaryless 3-manifold and let $\mathscr{X}^r$ be the Banach space of C^r vector fields on M. If $X \in \mathscr{X}^r$ denote $\Gamma(X)$ its chain recurrent set. We say that $X \in \mathscr{X}^r$ is *simple* when $\Gamma(X)$ is a union of finitely many hyperbolic critical orbits. By a critical orbit we mean an orbit that is either periodic or singular. It is easy to see that the set S^r of simple C^r vector fields is an open subset of $\mathscr{X}^r$.

Denote by $C^k(I, \mathscr{X}^r)$ the space of families X_μ of C^r vector fields depending on a parameter $\mu \in [-1, 1]$ such that the map $[-1, 1] \ni \mu \mapsto X_\mu \in \mathscr{X}^r$ is C^k. Endow $C^k(I, \mathscr{X}^r)$ with the C^k topology.

Among the families $X_\mu \in C^k(I, \mathscr{X}^r)$, we distinguish those that start at a simple system, i.e.

$$(*) \qquad X_{-1} \in S^r,$$

and leave the region of simple systems, i.e.

$$(**) \qquad X_\mu \notin \overline{S}^r \quad \text{for some } \mu > -1.$$

The *crossing parameter value* of such a family is the supremum of the μ's such that $X_\mu \in S^r$ (or, what is the same, the minimum μ such that $X_\mu \notin S^r$). Denote by $C^k_*(I, \mathscr{X}^r)$ the

set of such families. To simplify the notation, and without loss of generality we shall add to the definition of $C^k_*(I, \mathscr{X}^r)$ the requirement that *the crossing value of the parameter be zero*, i.e.

$$X_\mu \in C^k_*(I, \mathscr{X}^r) \Rightarrow \begin{cases} X_\mu \in S^r & \text{if } \mu < 0, \\ X_0 \notin S^r. \end{cases}$$

A *cycle* of a vector field $X \in \mathscr{X}^r$ is a compact invariant chain recurrent set of X consisting of a finite family of hyperbolic periodic orbits and orbits whose α and ω-limit sets are different hyperbolic periodic orbits of the family.

Translated into our context, what Newhouse and Palis conjectured in [NP] is that for a generic family $X_\mu \in C^k_*(I, \mathscr{X}^r)$, X_0 either has a non hyperbolic periodic orbit or a cycle. Even without the support of this conjecture, that remains widely open, cycles are a crucial concept for the understanding of how complex dynamical objects are born from very simple ones.

An orbit γ of a vector field X is nontransversal if $\alpha(\gamma)$ and $\omega(\gamma)$ are hyperbolic critical orbits and the stable and unstable manifolds of $\alpha(\gamma)$ and $\omega(\gamma)$ intersect nontransversally along γ.

Our object of study will be *simple singular cycles* defined as follows: a simple singular cycle Λ of a vector field $X \in \mathscr{X}^r$ is a cycle of X satisfying:

a) Λ contains a unique singularity σ_0.

b) The eigenvalues of $D_{\sigma_0} X : T_{\sigma_0} M \hookleftarrow$ are real and satisfy $-\lambda_3 < -\lambda_1 < 0 < \lambda_2$.

c) Λ contains a unique nontransversal orbit γ_0 which is contained in $W^u(\sigma_0)$ and $\omega(\gamma_0)$ is a periodic orbit σ_1.

d) For every $p \in \gamma_0$ and every invariant manifold $W(\sigma_0)$ of X, passing through σ_0 and tangent at σ_0 to the space spanned by the eigenvectors associated to $-\lambda_1$ and λ_2, we have

$$T_p W(\sigma_0) + T_p W^s(\sigma_1) = T_p M.$$

e) There is a neighborhood $\mathscr{U}$ of X such that if $Y \in \mathscr{U}$ the continuations $\sigma_i(Y)$, $0 \leqslant i \leqslant k$, of critical orbits σ_i of the cycle are well defined, the vector field Y is C^2-linearizable nearby $\sigma_0(Y)$ and the Poincaré maps of $\sigma_i(Y)$, $1 \leqslant i \leqslant k$, are C^2-linearizable.

f) Λ is isolated, i.e. it has an isolating block. Recall that an isolating block of an invariant set Λ of a vector field X is an open set U such that

$$\Lambda = \bigcap_t X^t(U),$$

where $X^t : M \hookleftarrow$ is the flow generated by X.

The motivation of this definition is closely related to the following property which is nowadays standard knowledge in bifurcation theory.

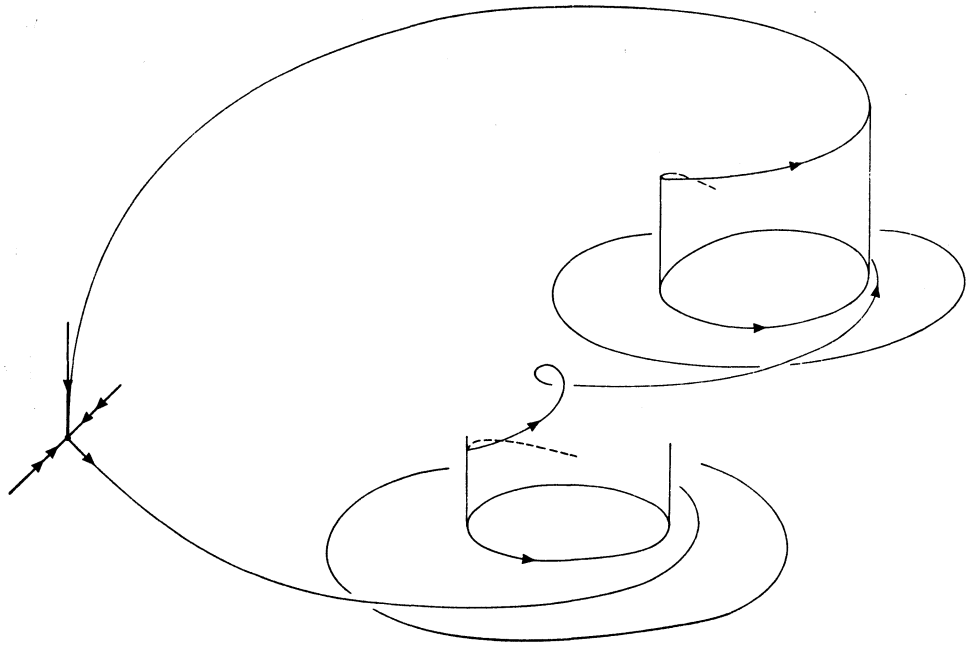

FIG. 1

Proposition. — *If* $r \geqslant 3$ *and* $k \geqslant 1$ *there exists an open and dense set* $\mathscr{A}$ *of* $C^k_*(I, \mathscr{X}^r)$ *such that if* $X_\mu \in \mathscr{A}$ *and* X_0 *has a cycle* Λ *that contains a singularity, then* Λ *is a simple singular cycle and* $\Gamma(X_0) - \Lambda$ *is a finite union of hyperbolic critical orbits.*

The $r \geqslant 3$ condition is required because the C^3-topology is the weaker one where the openess and density of property (*e*) is granted by Sternberg's linearization Theorem [S].

The next result gives the basic elementary description of what happens nearby a simple singular cycle when you perturb the vector field. We shall use the following notation: given $Y \in \mathscr{X}^r$ and $U \subset M$, set

$$\Lambda(Y, U) = \bigcap_t Y^t(U).$$

Theorem 1. — *Let* Λ *be a simple singular cycle of* $X \in \mathscr{X}^r$ *and let* U *be an isolating block of* Λ. *Then there exists a neighborhood* $\mathscr{U}$ *of* X *and a codimension-one submanifold* $\mathscr{N} \subset \mathscr{X}^r$ *containing* X *such that:*

a) $Y \in \mathscr{U} \cap \mathscr{N} \Rightarrow \Lambda(Y, U)$ *is a simple singular cycle topologically equivalent to* Λ.

b) $\mathscr{U} - \mathscr{N}$ *has two connected components, and one of them, that we shall denote by* $\mathscr{U}^-$, *is such that* $Y \in \mathscr{U}^-$ *implies that the chain recurrent set of* $Y/\Lambda(Y, U)$ *consists of the continuations* $\sigma_i(Y)$, $0 \leqslant i \leqslant k$, *of the critical orbits* σ_i *contained in* Λ.

This means that the cycle persists topologically unchanged in $\mathcal{N} \cap \mathcal{U}$ and is broken in $\mathcal{U}^-$, leaving behind a very simple dynamical object. The explosion will really take place in the other connected component of $\mathcal{U} - \mathcal{N}$, to be denoted $\mathcal{U}^+$. Define $\mathcal{U}_{\mathrm{H}}^+$ as the set of $Y \in \mathcal{U}^+$ such that the chain recurrent set of $Y/\Lambda(Y, U)$ is $\sigma_0(Y)$ plus a transitive hyperbolic set. The set $\mathcal{U}_{\mathrm{H}}^+$ fills a very large part of $\mathcal{U}^+$. This is the content of the next result, in whose statement $m(\cdot)$ denotes the Lebesgue measure of subsets of $\mathbf{R}$.

Theorem 2. — If $X_\mu \in \mathcal{A}$ crosses transversally $\mathcal{N}$ at X_0 and X_0 has a simple singular cycle Λ, and U is an isolating block of Λ, then there exists $\delta > 1$ such that

$$\limsup_{t \to 0} \frac{1}{t^\delta} m\{ 0 \leqslant \mu \leqslant t \mid X_\mu \in \mathcal{U}^+ - \mathcal{U}_{\mathrm{H}}^+ \} = 0.$$

The study of $\mathcal{U}^+ - \mathcal{U}_{\mathrm{H}}^+$ heavily depends on whether the eigenvalues

$$-\lambda_3 < -\lambda_1 < 0 < \lambda_2$$

at the singularity σ_0 satisfy $-\lambda_1 + \lambda_2 > 0$ or $-\lambda_1 + \lambda_2 < 0$. In the first case we say that the cycle is *expanding* and in the second that is *contracting*.

Denote by $c(\cdot)$ the upper limit capacity of subsets of $\mathbf{R}$.

Theorem 3. — Let $X_\mu \in \mathcal{A}$, Λ and U be as in Theorem 2. Then:

a) If the cycle is expanding, the set

$$\{ 0 \leqslant \mu \leqslant t \mid X_\mu \in \mathcal{U}^+ - \mathcal{U}_{\mathrm{H}}^+ \},$$

for t sufficiently small, is a Cantor set whenever $X_t \in \mathcal{U}_{\mathrm{H}}^+$, and

$$\lim_{t \to 0} c(\{ 0 \leqslant \mu \leqslant t \mid X_\mu \in \mathcal{U}^+ - \mathcal{U}_{\mathrm{H}}^+ \} = 0.$$

b) If the cycle is contracting then the set of parameters $\mu > 0$ for which the unstable manifold of the singularity $\sigma_0(X_\mu)$ converges to an attracting periodic orbit, accumulates on $\mu = 0$.

This leads naturally to introduce a new open subset $\mathcal{U}_{\mathrm{H}'} \subset \mathcal{U}^+$ consisting of those vector fields $Y \in \mathcal{U}^+$ for which the chain recurrent set of $Y/\Lambda(Y, U)$ is the union of $\sigma_0(Y)$, a transitive hyperbolic set and a unique attracting periodic orbit. It is clear that this set is open. The natural question is:

Is $\mathcal{U}_{\mathrm{H}}^+ \cup \mathcal{U}_{\mathrm{H}'}^+$ dense in $\mathcal{U}$ in the contracting case?

In the expanding case, the next theorem will show that $\mathcal{U}_{\mathrm{H}'}^+$ is empty and $\mathcal{U}_{\mathrm{H}}^+$ is dense in $\mathcal{U}^+$. In a special contracting case, determined by supplementary conditions on the eigenvalues of the singularity, an affirmative answer to the question has been recently given by Pacífico and Rovella [PR].

Theorem 4. — If $X \in \mathscr{X}^r$, Λ *and* U *are as in the statement of Theorem 2 and if* Λ *is expanding, then* $\mathscr{U} - \mathscr{U}_H^+$ *is laminated by codimension 1,* C^1 *submanifolds, such that for all the vector fields in each lamina, the dynamics of the maximal invariant set of* U *is the same up to topological equivalence. Moreover, when* $Y \in \mathscr{U} - \mathscr{U}_H^+$, $\Lambda(Y, U)$ *is a chain recurrent expansive set.*

This gives a complete description of $\mathscr{U} - \mathscr{U}_H^+$ in the expanding case. Our next and final result shows the stability of one-parameter families of vector fields crossing $\mathscr{N}$ transversally, in the expanding case.

We say that a one-parameter family $X_\mu \in C^k(I, \mathscr{X}^r)$ is Γ-*stable* if for all $\varepsilon > 0$ there exists a neighborhood $\mathscr{U}$ of X_μ in $C^r(I, \mathscr{X}^r)$ such that if $Y_\mu \in \mathscr{U}$ there exist a reparametrizing homeomorphism $\varphi : I \to I$, ε-near to the identity, and, for each $\mu \in I$, a topological equivalence h_μ between $X_\mu/\Gamma(X_\mu)$ and $Y_\mu/\Gamma(Y_\mu)$, ε-near to the identity, such that the map

$$(\mu, x) \in \{(\mu, x) ; \mu \in I, x \in \Gamma(X_\mu)\} \mapsto (\varphi(\mu), h_\mu(x)) \in \{(s, w) ; s \in I, \omega \in \Gamma(Y_\mu)\}$$

is continuous.

Theorem 5. — If $X_\mu \in \mathscr{A}$ *is as in the statement of Theorem 2 and* X_0 *has an expanding simple singular cycle, then there exists* $\delta > 0$ *such that* $\{ X_\mu \mid -1 \leqslant \mu \leqslant \delta \}$ *is* Γ-*stable.*

We are thankful to J. Palis for useful conversations and to M. Viana for the proof of the result in the Appendix. The first two authors are grateful to IMPA for its very kind hospitality.

Proof of the Theorems

Proof of Theorem 1.

Let $X \in \mathscr{X}^r$ be a vector field having a simple singular cycle Λ with isolating block $U \subset M$. For simplicity we will assume that Λ contains a unique periodic orbit. So, Λ is the union of a singularity σ_0, a periodic orbit σ_1 and a unique nontransversal orbit γ such that $\lambda(\gamma) = \sigma_0$ and $w(\gamma) = \sigma_1$.

Let S be a cross section to the flow of X at $q \in \sigma_1$ parametrized by

$$\{(x, y) ; |x|, |y| \leqslant 1\}$$

and satisfying $W^s(\sigma_1) \supseteq \{(x, 0) ; |x| \leqslant 1\}$ and $W^u(\sigma_1) \supseteq \{(x, y) ; |y| \leqslant 1\}$.

We call a closed subset $C \subset S$ a *horizontal strip* if it is bounded (in S) by two disjoint continuous curves connecting the vertical sides of S, $\{(-1, y), |y| \leqslant 1\}$ and $\{(1, y), |y| \leqslant 1\}$.

Let p be the first intersection of γ with S. Then $p = (x_0, 0)$ and we assume $x_0 > 0$. Since $W^u(\sigma_1)$ intersects $W^s(\sigma_0)$ and γ has σ_0 as α-limit and σ_1 as ω-limit set, a first return map F is defined on a subset of S. Moreover, if $q_0 = (0, y_0) \in S$ is such that its ω-limit set is σ_0 then there exists a horizontal strip $R \ni q_0$ so that F is defined on R. As Λ is isolated, we have $\Lambda \cap S \subset \{(x, y) ; y \geqslant 0\}$ and $F(R) \subset \{(x, y), y \leqslant 0\}$. See figure 2.

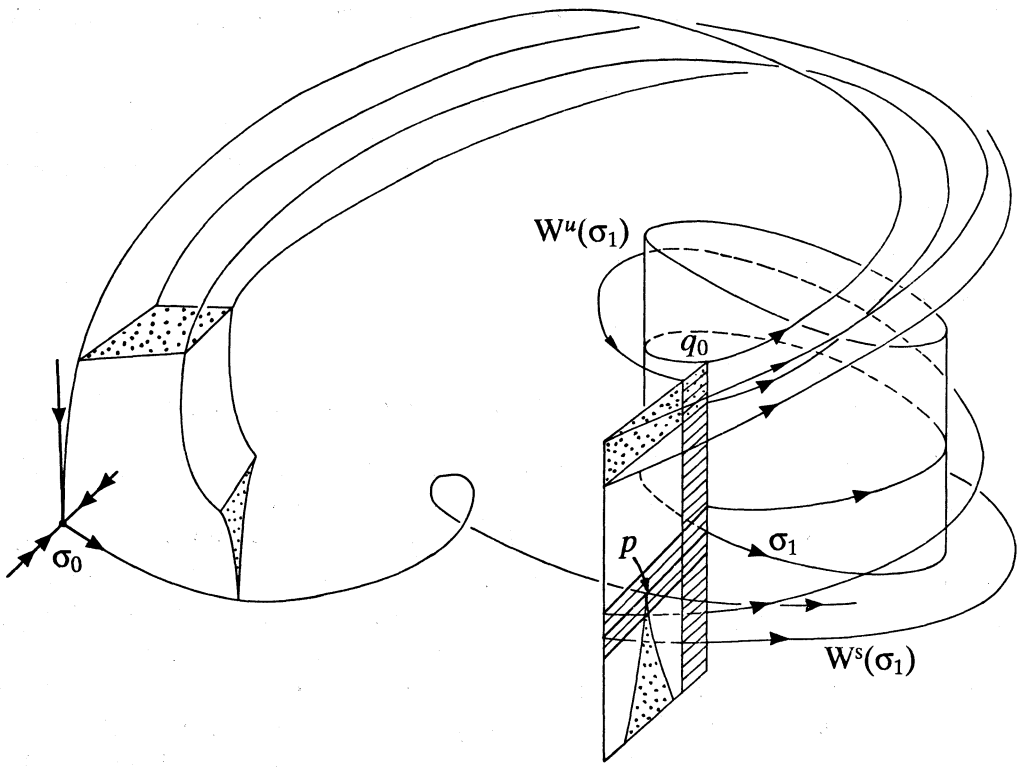

FIG. 2

If $Y \in \mathscr{X}^r$ is nearby X then $W^s(\sigma_1(Y))$ intersects S at a curve $c(Y)$ and the first intersection of $W^u(\sigma_0(Y))$ with S is a point $p(Y)$. Observe that both $c(Y)$ and $p(Y)$ vary smoothly with Y.

The implicit function theorem on Banach spaces implies that the condition $p(Y) \in c(Y)$ defines a C^1 local codimension-one submanifold $\mathscr{N}$ in a neighborhood $\mathscr{U} \subset \mathscr{X}^r$ of X such that $\mathscr{U} \backslash \mathscr{N}$ has two connected components; one of them, that we shall call $\mathscr{U}^-$, characterized by $p(Y) \in S$, lies below $c(Y)$. Let $\mathscr{U}^+$ be the other component.

Clearly if $Y \in \mathscr{U}^-$, then $\Gamma(Y/\Lambda(Y, U))$ is the union of $\sigma_0(Y)$ and $\sigma_1(Y)$ and, so, Y is simple.

If $Y \in \mathscr{U}^+$, then $\sigma_1(Y)$ has transversal homoclinic orbits and so Y is not simple. Thus, $\mathscr{U} \cap S^r$ coincides with $\mathscr{U}^-$, proving Theorem 1. ■

Before going through the proof of Theorem 2, let us introduce some notation.

Let $X \in \mathscr{X}^r$ be a vector field having a simple singular cycle Λ with isolating block U. For simplicity we will assume that Λ contains a singularity σ_0, a unique periodic orbit σ_1 and a unique non transversal orbit $\gamma \subset W^u(\sigma_0)$ such that $\alpha(\gamma) = \sigma_0$ and $\omega(\gamma) = \sigma_1$.

Let S, $\mathscr{U}$, $\mathscr{N}$, $\mathscr{U}^+$ and $\mathscr{U}^-$ be as above. Taking $\mathscr{U}$ small enough, S is also a cross section for every $Y \in \mathscr{U}$ at $\sigma_1(Y)$, where $\sigma_1(Y)$ is the periodic orbit obtained by conti-

nuation of σ_1. As before, there exists a first return map F_Y defined on a subset of S for every $Y \in \mathscr{U}$.

Since $\Lambda(Y, U)$ is the closure of the saturation by Y^t of $\Lambda(Y, Y) \cap S$ and $\Lambda(Y, U) \cap S$ is the maximal invariant set of F_Y, it is necessary to describe F_Y to understand the dynamics of $\Lambda(Y, U)$. To do so we choose coordinates (x, y) on S depending smoothly on Y so that

(i) $Q = \{(x,y); |x|, |y| \leqslant 1\} \subset S$;
(ii) $\{(x, 0); |x| \leqslant 1\} \subseteq W^s(\sigma_1(Y))$;
(iii) $\{(0,y); |y| \leqslant 1\} \subseteq W^u(\sigma_1(Y))$;
(iv) $\Lambda \cap S \subseteq \{(x,y), y \geqslant 0\}$;
(v) the first intersection of $W^u(\sigma_0(Y))$ with S is a point $p_Y = (x_Y, y_Y)$ with $0 < x_Y < 1$.

Notice that $Y \in \mathscr{U}^+$ if and only if $y_Y > 0$; $\Gamma(Y/\Lambda(Y, U)) \neq \{\sigma_0(Y), \sigma_1(Y)\}$ if and only if $y_Y > 0$ and $\Lambda(Y, U) \cap S \subset Q^+ = \{(x,y) \in Q; x, y \geqslant 0\}$.

For $y_Y \geqslant 0$, $W^u(\sigma_0(Y))$ intersects $W^s(\sigma_1(Y))$, and since $W^u(\sigma_1(Y))$ intersects $W^s(\sigma_0(Y))$ (transversally!), we see that if $q_0(Y) = (0, y_0(Y)) \in Q^+$ is such that $\omega(q_0(Y)) = \sigma_0(Y)$ and $\alpha(q_0(Y)) = \sigma_1(Y)$, then there exists a horizontal strip $R_Y^0 \ni q_0(Y)$ so that the positive orbit of points at R_Y^0 pass first near $\sigma_0(Y)$ and then return to Q. On the other hand, the positive orbit of points at a horizontal strip R_Y containing $W^s(\sigma_1(Y)) \cap Q^+$ turns around the closed orbit $\sigma_1(Y)$ and then returns to Q. See figure 3.

So, F_Y is defined on $R_Y^0 \cup R_Y$ and the restriction of F_Y to R_Y coincides with the Poincaré map P_Y associated to $\sigma_1(Y)$. We further assume that P_Y is linear on Q. Let $\rho_Y > 1$ and $\tau_Y < 1$ be the eigenvalues of $DP_Y(0, 0)$. Thus,

$$R_Y^0 = \{(x,y); x \geqslant 0, \tilde{\theta} \leqslant y \leqslant \theta_Y(x)\}$$

where $\theta_Y(x) = \theta(Y, x)$ is a smooth real function satisfying

$$\{(x, \theta_Y(x)), 0 \leqslant x \leqslant 1\} \subseteq W^s(\sigma_0(Y))$$

and if $\delta_Y(x) = \delta(Y, x)$ is so that $\{(x, \theta_Y(x) - \delta_Y(x)), 0 \leqslant x \leqslant 1\} \subseteq W^s(\sigma_1(Y))$, then there is $\varepsilon > 0$ such that $\tilde{\theta} + \varepsilon < \theta_Y(x) - \delta_Y(x)$ for every x. Making a linear change of coordinates we can also assume (vi) $|\theta'_Y| < 1/100$, δ_Y goes to zero in the C^1 topology when Y approaches $\mathscr{N}$ and $\theta_Y(x_0) = 1$ for some $x_0 \in [0, 1]$.

Clearly $R_Y = \{(x,y); x \geqslant 0, \rho_Y^{-1} \leqslant y \leqslant \rho_Y^{-1}.\theta_Y(x)\}$ and $F_Y(x,y) = (\tau_Y.x, \rho_Y.y)$ for $(x,y) \in R_Y$.

To obtain the expression of $F_Y(x,y)$ for $(x,y) \in R_Y^0$ we proceed as follows.

Let $-\lambda_3(Y) < -\lambda_1(Y) < 0 < \lambda_2(Y)$ be the eigenvalues of $DY(\sigma_0(Y))$, $\alpha_Y = \dfrac{\lambda_1(Y)}{\lambda_2(Y)}$ and $\beta_Y = \dfrac{\lambda_3(Y)}{\lambda_2(Y)}$. Let (x_1, x_2, x_3) be C^2 linearizing coordinates for Y in a neighborhood $U_0 \ni \sigma_0(Y)$ depending smoothly on Y.

Let L, $\tilde{L}$ be the planes $x_1 = 1$ and $x_2 = 1$ respectively.

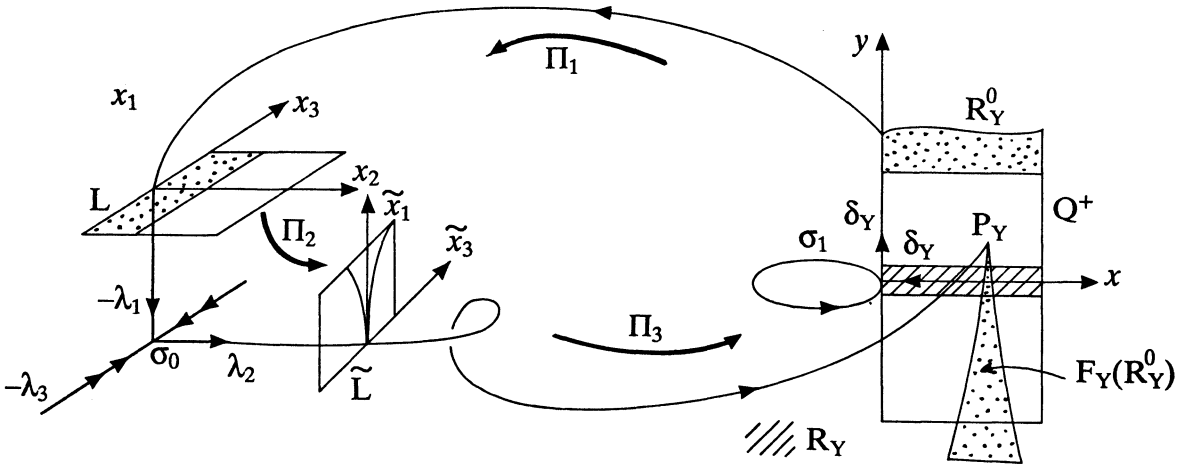

FIG. 3

For $(x,y) \in R_Y^0$ we have $F_Y(x,y) = \pi_3 \circ \pi_2 \circ \pi_1(x,y) = (f_Y(x,y), g_Y(x,y))$ where

a) $\pi_1 : Q^+ \to L$ is a diffeomorphism, $\pi_1(x, \theta_Y(x)) = (x_3, 0)$ for $0 \leqslant x \leqslant 1$,

$$D\pi_1(x,y) = \begin{pmatrix} a(x,y) & b(x,y) \\ c(x,y) & d(x,y) \end{pmatrix} \quad \text{with } k_1 \leqslant |a(x,y)|,\ |d(x,y)| \leqslant K_1,$$

for k_1 and K_1 two positive real constants. Up to replacing $\{(x, \theta_Y(x)), x \in [0, 1]\}$ by some negative iterate of it (and shrinking $\mathscr{U}$ if necessary) we may assume that $|c(x,y)|/|d(x,y)| \leqslant \varepsilon$ for every $(x,y) \in R_Y^0$ and $Y \in \mathscr{U}^+$, $0 < \varepsilon \ll 1$.

b) $\pi_3 : \tilde{L} \to Q^+$ is a diffeomorphism, $D\pi_3(\tilde{x}_3, \tilde{x}_1) = \begin{pmatrix} \tilde{a}(\tilde{x}_3, \tilde{x}_1) & \tilde{b}(\tilde{x}_3, \tilde{x}_1) \\ \tilde{c}(\tilde{x}_3, \tilde{x}_1) & \tilde{d}(\tilde{x}_3, \tilde{x}_1) \end{pmatrix}$ with $k_2 \leqslant |\tilde{a}(\tilde{x}_3, \tilde{x}_1)|$, $|\tilde{d}(\tilde{x}_3, \tilde{x}_1)| \leqslant K_2$ for some positive constants k_2, K_2. Moreover, replacing $p(Y)$ by some positive iterate of it (also contained in $W^u(\sigma_0(Y) \cap S)$ has the effect of decreasing $|\tilde{b}|/|\tilde{d}|$ so that we may assume $|\tilde{b}|/|\tilde{d}| \leqslant \varepsilon$ for some small $\varepsilon > 0$.

c) $\pi_2 : L \to \tilde{L}$ is given by $\pi_2(x_3, x_2) = (\tilde{x}_3 = x_3 . x_2^{\beta_Y}, \tilde{x}_1 = x_2^{\alpha_Y})$.

From *a)*, *b)* and *c)* above follow

d)
$$\begin{aligned} \frac{\partial}{\partial x} f_Y(x,y) &= \alpha_Y . c(x,y) . \tilde{b}(\tilde{x}_3, \tilde{x}_1) . x_2^{\alpha_Y - 1} \\ &\quad + \beta_Y . c(x,y) . \tilde{a}(\tilde{x}_3, \tilde{x}_1) . x_3 . x_2^{\beta_Y - 1} \\ &\quad + a(x,y) . \tilde{a}(\tilde{x}_3, \tilde{x}_1) . x_2^{\beta_Y} + r_1(x,y), \quad |r_1(x,y)| \leqslant \text{constant} . x_2^{\beta_Y - 1}. \end{aligned}$$

$$\begin{aligned} \frac{\partial}{\partial y} f_Y(x,y) &= \alpha_y . d(x,y) . \tilde{b}(\tilde{x}_3, \tilde{x}_1) . x_2^{\alpha_Y - 1} \\ &\quad + \beta_Y . d(x,y) . \tilde{a}(\tilde{x}_3, \tilde{x}_1) . x_3 . x_2^{\beta_Y - 1} + r_2(x,y), \quad |r_2(x,y)| \leqslant \text{constant} . x_2^{\beta_Y}. \end{aligned}$$

$$\frac{\partial}{\partial x} g_Y(x,y) = \alpha_Y . c(x,y) . \tilde{d}(\tilde{x}_3, \tilde{x}_1) . x_2^{\alpha_Y - 1}$$
$$+ \beta_Y . c(x,y) . \tilde{c}(\tilde{x}_3, \tilde{x}_1) . x_3 . x_2^{\beta_Y - 1} + r_3(x,y), \quad |r_3(x,y)| \leqslant \text{constant} . x_2^{\beta_Y}.$$

$$\frac{\partial}{\partial y} g_Y(x,y) = \alpha_Y . d(x,y) . \tilde{d}(\tilde{x}_3, \tilde{x}_1) . x_2^{\alpha_Y - 1}$$
$$+ \beta_Y . d(x,y) . \tilde{c}(\tilde{x}_3, \tilde{x}_1) . x_3 . x_2^{\beta_Y - 1} + r_4(x,y), \quad |r_4(x,y)| \leqslant \text{constant} . x_2^{\beta_Y}.$$

We now state a useful lemma establishing the existence of C^1 invariant stable foliations for F_Y. Its proof is in the Appendix.

Lemma 1. — For every $Y \in \mathscr{U} \setminus \mathscr{U}^-$ *there exists an invariant* C^1 *stable foliation* $\mathscr{F}^s_Y$ *for* F_Y *depending* C^1 *on* Y.

This lemma implies that after a C^1 change of coordinates, $\theta_Y(x)$ and $\delta_Y(x)$ do not depend on x and that $g_Y(x,y)$ does not depend on y. For simplicity we assume $\theta_Y(x) \equiv 1$. We also have $c(x,y) \equiv 0$. As π_1 is a diffeomorphism, $a(x,y) \neq 0$ and $d(x,y) \neq 0$ for every (x,y). Thus using *d)* we conclude that there are real positive constants C and K so that

e) $$0 < \left| \frac{\partial}{\partial x} f_Y(x,y) \right| \leqslant K . x_2^{\beta_y} + r_1(x,y),$$

$$\left| \frac{\partial}{\partial y} f_Y(x,y) \right| \leqslant K . x_2^{\alpha_y - 1} + r_2(x,y)$$

and $$\left| \frac{d}{dy} g_Y(y) \right| \leqslant C . x_2^{\alpha_Y - 1} + r_3(y), \quad |r_3(y)| \leqslant \text{constant} . x_2^{\alpha_Y}.$$

Moreover,

f) $$f_Y(x, 1) = x_Y \quad \text{for } x \in [0, 1], \quad g_Y(1) = y_Y.$$

g) $$f_Y(x, 1 - \delta_Y) \subseteq \{(x, 0), x \in (0, 1)\}, \quad g_Y(1 - \delta_Y) = 0.$$

Conditions *e), f)* and *g)* imply $\delta_Y = A_Y . y_Y^{1/\alpha_Y}$, A_Y a positive constant.
Finally, making another C^1 change of coordinates we obtain

$$F_Y(x,y) = (f_Y(x,y), g_Y(y))$$

with $$g_Y(y) = \begin{cases} \rho_Y . y & \text{for } y \in [0, \rho_Y^{-1}], \\ y_Y - A_Y^{-\alpha_Y} . (1-y)^{\alpha_Y}[1 + \varphi((1-y)^{\alpha_Y}, y_Y)] & \\ & \text{for } y \in [1 - A_Y . y_Y^{1/\alpha_Y}, 1], \end{cases}$$

where φ is continuous, C^1 on $[0, 1)$, $\varphi(0, y_Y) = \varphi(A_Y^{\alpha_Y} . y_Y, y_Y) = 0$.

Furthermore, using *e)*, *f)* and *g)* we obtain

h) $$\left|\frac{d}{dy} g_Y(y)\right| \leqslant C.|1-y|^{\alpha_Y - 1}.$$

$$0 < \left|\frac{\partial}{\partial x} f_Y(x,y)\right| \leqslant K.|1-y|^{\beta_Y} \quad \text{and} \quad \left|\frac{\partial}{\partial y} f_Y(x,y)\right| \leqslant K.|1-y|^{\alpha_y - 1}.$$

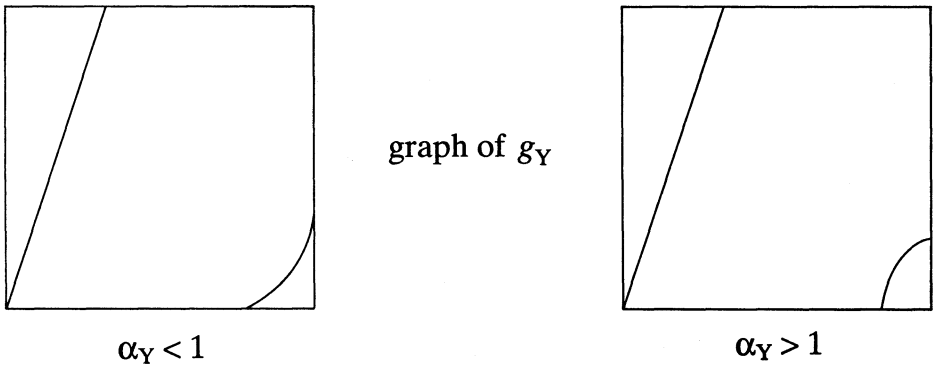

FIG. 4

We now come to the proof of Theorem 2.

Given $Y \in \mathscr{U}^+$, let $k_Y = 1 + y_Y^{\alpha_Y^{-1}}$ and

$$\mathscr{U}_0^+ = \{ Y \in \mathscr{U}^+ ; \exists n_0 \in \mathbf{N} \text{ so that } k_Y . \rho_Y^{-1} < \rho_Y^{n_0} . y_Y < 1 - \delta_Y \}.$$

The next two lemmas show that $\mathscr{U}_0^+ \subseteq \mathscr{U}_H^+$, that is, $\Gamma(Y/\Lambda(Y, U))$ is $\sigma_0(Y)$ plus a transive hyperbolic set for every $Y \in \mathscr{U}_0^+$.

To prove Theorem 2 we shall actually prove that there exist positive real constants M_1, M_2 and δ so that

$$(1) \qquad M_1 < \limsup_{\varepsilon \to 0} \frac{m(\mu \leqslant \varepsilon ; X_\mu \notin \mathscr{U}_0^+)}{\varepsilon^{1+\delta}} < M_2,$$

where X_μ is a one-parameter family as in the statement of Theorem 2. This obviously implies the result.

Lemma 2. — *If* $Y \in \mathscr{U}_0^+$ *then* $\Gamma(Y/\Lambda(Y, U))$ *is* $\sigma_0(Y)$ *plus a hyperbolic set.*

Proof. — Let $\Lambda(F_Y, Q^+) = \bigcap_{n \in \mathbf{Z}} F_Y^n(Q^+)$. For $Y \in \mathscr{U}_0^+$, $(x_Y, y_Y) \notin \Lambda(F_Y, Q^+)$ and then $\Lambda(Y, U)$ is the closure of the saturation of $\Lambda(F_Y, Q^+)$ by Y^t. Thus, to obtain the result it is enough to prove that $\Lambda(F_Y, Q^+)$ is a hyperbolic set.

Observe that for $Y \in \mathscr{U}_0^+$, $\Lambda(F_Y, Q^+) \subseteq \tilde{R}_Y^0 \cup R_Y$, where

$$\tilde{R}_Y^0 = \{(x, y) \in R_Y^0; y \leqslant 1 - A_Y . y^{(\alpha_Y^{-2} + \alpha_Y^{-1})}\}.$$

The previous lemma implies the existence of a stable cone field for F_Y. So, to obtain the hyperbolicity of $\Lambda(F_Y, Q^+)$ we have only to prove the existence of an unstable cone field for F_Y. We will actually prove the existence of an unstable cone field for $G_Y = F_Y^{n_0+2}$ which easily implies the result. For this we claim that if $\mathscr{U}$ is small enough, then

(i) $DG_Y(x, y) . (1, 1) = (u, v)$; $u = u(x, y)$, $v = v(x, y)$ and $|v| > |u|$ for every $(x, y) \in \Lambda(F_Y, Q^+)$;

(ii) $DG_Y(x, y) . (1, 1) = (\bar{u}, \bar{v})$; $\bar{u} = \bar{u}(x, y)$, $\bar{v} = \bar{v}(x, y)$ and $|\bar{v}| > |\bar{u}|$ for every $(x, y) \in \Lambda(F_Y, Q^+)$;

(iii) there exists $\nu > 1$ such that

$$\| DG_Y(x, y) . (u, v) \| \geqslant \nu . \|(u, v)\| \quad \text{for } |v| > |u|.$$

Notice that (iii) follows from (i), (ii) and the inequality

$$\| DG_Y(x, y) . (\pm 1, 1) \| > \|(\pm 1, 1)\| \quad \text{for every } (x, y) \in \Lambda(F_Y, Q^+).$$

Suppose $(x, y) \in \tilde{R}_Y^0$. Then $G_Y = P_Y^{n_0+1} \circ F_Y$ where P_Y is the linear map $P_Y(x, y) = (\tau_Y . x, \rho_Y . y)$ and hence

$$DG_Y(x, y) . (\pm 1, 1) = P_Y^{n_0+1} \circ \begin{pmatrix} \frac{\partial}{\partial x} f_Y(x, y) & \frac{\partial}{\partial y} f_Y(x, y) \\ 0 & \frac{\partial}{\partial y} g_Y(y) \end{pmatrix} \begin{pmatrix} \pm 1 \\ 1 \end{pmatrix} = \begin{pmatrix} u \\ v \end{pmatrix},$$

where $$u = \tau_Y^{n_0+1} . \left(\pm \frac{\partial}{\partial x} f_Y(x, y) + \frac{\partial}{\partial y} f_Y(x, y) \right)$$

and $$v = \rho_Y^{n_0+1} . \frac{\partial}{\partial y} g_Y(y).$$

Using *h)* above we obtain that there are positive real constants L and N such that

$$|u| < L . \tau_Y^{n_0+1} . |1 - y|^{\alpha_Y - 1}$$

and $$|v| \geqslant N . \rho_Y^{n_0+1} . |1 - y|^{\alpha_Y - 1}.$$

Hence we have $|u| < |v|$ for $\mathscr{U}$ small enough.

For $(x, y) \in R_Y$, either $F_Y^j(x, y) \in R_Y$ for every $j = 0, 1, \ldots, n_0 + 1$ or $F_Y^j(x, y) \in R_Y$ for $j = 0, 1, \ldots, n_0$ and $F_Y^{n_0+1}(x, y) \in \tilde{R}_Y^0$. In the first case $G_Y(x, y) = P_Y^{n_0+2}(x, y)$ and the result follows trivially. In the second case $G_Y = F_Y \circ P_Y^{n_0+1}$ and we argue as before.

We now prove (iii). For $(x, y) \in \widetilde{R}^0_Y$ we have

$$(2) \qquad \| DF^{n_0+2}_Y(x, y) . (\pm 1, 1) \| = \| (u, v) \| \geqslant \| v \| \geqslant N . \rho^{n_0+1}_Y . | 1 - y |^{\alpha_Y - 1}.$$

If $\alpha_Y - 1 < 0$, choosing $\mathscr{U}$ small enough we are done. Otherwise, since $(x, y) \in \widetilde{R}^0_Y$ we have $y < 1 - A . y_Y^{(\alpha_Y^{-2} + \alpha_Y 1)}$ and hence $| 1 - y |^{\alpha_Y - 1} \geqslant A^{\alpha_Y - 1} . y_Y^{1 - \alpha_Y^{-2}}$. So

$$(3) \qquad \| DF^{n_0+2}_Y(x, y) . (\pm 1, 1) \| \geqslant \widetilde{N} . \rho^{n_0+1}_Y . y_Y . y_Y^{-\alpha_Y^{-2}}.$$

But $Y \in \mathscr{U}_0^+$ implies $\rho^{n_0+1}_Y . y_Y \geqslant 1$ and thus

$$\| DF^{n_0+2}_Y(x, y) . (\pm 1, 1) \| \geqslant \widetilde{N} . y_Y^{-\alpha_Y^{-2}} > 10 \text{ for } \mathscr{U} \text{ small enough.}$$

If $(x, y) \in R_Y$ the result follows similarly. ■

Lemma 3. — *If* $Y \in \mathscr{U}_0^+$ then $\Lambda(F_Y, Q^+)$ *is a transitive set.*

Proof. — Let $F_Y(x, y) = (f_Y(x, y), g_Y(y))$ and $I^0_Y = [0, \rho_Y^{-1}]$, $I^1_Y = [1 - A_Y . y_Y^{1/\alpha_Y}, 1]$. Then $g_Y : I^0_Y \cup I^1_Y \to [0, 1]$. To each $x \in I_Y \cup I^1_Y$ we associate a 2-symbol sequence $\mathbf{x}$ defined by $x_i = 0$ if $g^i_Y(x) \in I^0_Y$, $x_i = 1$ if $g^i_Y(x) \in I^1_Y$. The sequence $\mathbf{x}$ is called the itinerary of x.

Given $Y \in \mathscr{U}_0^+$, let N_0 be so that $1 < y_Y . \rho^{N_0}_Y < \rho_Y$. We claim that given $(N_i)_{i \geqslant 1}$, $N_i \in \mathbf{N}$, $N_i \geqslant N_0$ for every i, the sequence $\mathbf{a} = 1 \underbrace{0 \ldots 0}_{N_1} 1 \underbrace{0 \ldots 0}_{N_2} 1 \underbrace{0 \ldots 0}_{N_3} 1 \ldots$ is realized as the itinerary of a unique point $x \in I^0_Y \cup I^1_Y$. Indeed, for each $i \geqslant 1$, let $R_{N_i} = \rho_Y^{-N_i}[1 - A_Y . y_Y^{1/\alpha_Y}, 1]$. Then $g^{N_i+1}_Y(R_{N_i}) = I^i_Y$ for every i and defining inductively

$$C_1 = g_Y^{-1}(R_{N_i}) \cap I^1_Y,$$
$$C_k = g^{-(N_1+1)} \circ g^{-(N_2+1)} \circ \ldots \circ g^{-(N_{k-1}+1)}(g^{-1}(R_{n_k}) \cap I^1_Y) \cap I^1_Y$$

we have $C_1 \supset C_2 \supset \ldots$ Thus $\bigcap_{i \geqslant 1} C_i$ is nonempty and there exists $x \in Y^0_Y \cup Y^1_Y$ so that its itinerary is $\mathbf{a}$. Now we observe that the proof we gave in Lemma 2 (actually inequality (3)) implies the unicity of such an x.

Denote by Λ_{g_Y} the maximal invariant set of g_Y. The result above implies that the pre-orbit of 0 by g_Y is dense in Λ_{g_Y} and so Λ_{g_y} is transitive. This implies the transitivity of $\Lambda(F_Y, Q^+)$. ■

To conclude the proof of Theorem 2 it remains to prove inequality (1) above. For this, let $X_\mu \in \mathscr{A}$ be as in the statement of the theorem. We start by reparametrizing X_μ in such way that $y_{X_\mu} = \mu$. As before $\alpha_0 = \lambda_1(0)/\lambda_2(0)$ where $-\lambda_3(0) < -\lambda_1(0) < 0 < \lambda_2(0)$ are the eigenvalues of $DX_0(\sigma_0)$, σ_0 the singularity contained in the simple singular cycle Λ_0 of X_0.

We will assume $\alpha_\mu = \alpha$, $A_\mu = A$ and $\rho_\mu = \rho$ for $0 \leqslant \mu \leqslant \varepsilon$. The general case, although more difficult can be done in a similar way.

Let $n_0 > 0$ be so that $\rho^{-n_0} < \varepsilon$. Call $\mu_0 = \rho^{-n_0}$ and for $n > n_0$ define

$$R_n^1 = \{ \mu ; 1 - A_\mu^{\alpha^{-1}} \leqslant \rho^n . \mu \leqslant 1 \},$$
$$R_n^2 = \{ \mu ; \rho^{-1} \leqslant \rho^n . \mu \leqslant k_\mu + \rho^{-1} \}, \quad \text{where } k_\mu = \mu^{\alpha^{-1}} . \rho^{-1}.$$

If $R^i = \bigcup_{n \geqslant n_0} R_n^i$, $i = 1, 2$, we have $\{ \mu ; X_\mu \notin \mathscr{U}_0^+ \} = R^1 \cup R^2$. So, to obtain (1) it is enough to prove that

$$\frac{A + \rho^{-1}}{1 + \rho^{-(1+\alpha^{-1})}} \leqslant \frac{m(R^1 \cup R^2)}{\mu_0^{1+\alpha^{-1}}} \leqslant \frac{A + \rho^{-1}}{1 - \rho^{-(1+\alpha^{-1})}}.$$

Indeed, if $\mu \in R_n^1$, $n \geqslant n_0$, then $\mu \leqslant \rho^{-n}$ and so $\mu^{\alpha^{-1}} \leqslant \rho^{-n.\alpha^{-1}}$ which implies $1 - A_\mu^{\alpha^{-1}} \geqslant 1 - A.\rho^{-n.\alpha^{-1}}$. Hence $\mu \in \rho^{-n}[1 - A.\rho^{-n.\alpha^{-1}}, 1]$ and $m(R_n^1) \leqslant A.\rho^{-n(1+\alpha^{-1})}$.

If $\mu \in R_n^2$, $n \geqslant n_0$, then $\mu \leqslant \rho^{-n}$ which implies $k_\mu = \mu^{\alpha^{-1}}.\rho^{-1} \leqslant \rho^{-n(1+\alpha^{-1})}$. Hence $\rho^{-n-1} \leqslant \mu \leqslant \rho^{-n-1}(1 + \rho^{-n.\alpha^{-1}})$ and $m(R_n^2) \leqslant \rho^{-n(1+\alpha^{-1})}$. Thus

$$m(R^1 \cup R^2) \leqslant \sum_{n \geqslant n_0} (A.\rho^{-n(1+\alpha^{-1})} + \rho^{-n}.\rho^{-1}.\rho^{-n.\alpha^{-1}})$$
$$\leqslant (A + \rho^{-1}) \sum_{n \geqslant n_0} \rho^{-n(1+\alpha^{-1})} = (A + \rho^{-1}) . \frac{\rho^{n_0(1+\alpha^{-1})}}{1 - \rho^{-(1+\alpha^{-1})}}.$$

So
$$\frac{m(R^1 \cup R^2)}{\mu_0^{1+\alpha^{-1}}} = \frac{m(R^1 \cup R^2)}{\rho^{-n_0(1+\alpha^{-1})}} \leqslant \frac{A + \rho^{-1}}{1 - \rho^{-(1+\alpha^{-1})}}.$$

The other inequality of (1) is obtained in a similar way. This concludes the proof of Theorem 2. ■

Proof of Theorem 3.

a) Let $X_\mu \in \mathscr{A}$ be as in the statement of Theorem 3, $\mathscr{F}_\mu^s$ be the stable foliation for F_μ given in Lemma 1 and $g_\mu : [0, 1] \to [0, 1]$ be the map induced by $\mathscr{F}_\mu^s$. Recall that after a C^1 change of coordinates g_μ is given by

$$g_\mu(y) = \begin{cases} \rho_\mu . y & \text{for } 0 \leqslant y \leqslant \rho_\mu^{-1}, \\ - A_\mu^{-\alpha_\mu} . (1 - y)^{\alpha_\mu}[1 + \varphi((1 - y)^{\alpha_\mu}, \mu)] + \mu & \\ & \text{for } 1 - A_\mu . \mu^{1/\alpha_\mu} \leqslant y \leqslant 1. \end{cases}$$

Define $T_\mu = \{ y \in \mathbf{R} ; \rho_\mu^{-1} < y < 1 - A_\mu . \mu^{1/\alpha_\mu} \}$.

Given $\bar{\mu} > 0$ small and such that $X_{\bar{\mu}} \in \mathscr{U}_H^+$, Lemma 4 implies that

$$\{ \mu \leqslant \bar{\mu} ; X_\mu \notin \mathscr{U}_H^+ \} = \{ \mu \in [0, \bar{\mu}] ; g_\mu^n(1) \notin T_\mu \text{ for every } n \geqslant 0 \}.$$

Since the change of coordinates above is differentiable and depends C^1 on μ, the result is a consequence of following lemma.

Lemma 4. — *Given $\bar{\mu}$ as above, $\{ \mu \leqslant \bar{\mu};\ X_\mu \notin \mathscr{U}_H^+ \}$ is a Cantor set and its limit capacity satisfy*

$$\lim_{\bar{\mu} \to 0} c(\{ \mu \leqslant \bar{\mu};\ X_\mu \notin \mathscr{U}_H^+ \}) = 0.$$

Proof. — We will assume $\alpha_\mu = \alpha$, $\rho_\mu = \rho$ and $A_\mu = A$ for $0 \leqslant \mu \leqslant \bar{\mu}$. The general case, more difficult, can be done using the same ideas and similar calculations.

Given $n_0 \in \mathbf{N}$, let $\tilde{\mu} = \rho_{\tilde{\mu}}^{-n_0}$ and if $E \subset [0, \tilde{\mu}]$ denote by E^c the complement of E in $[0, \tilde{\mu}]$.

Observe that for $0 \leqslant \mu \leqslant \tilde{\mu}$ we have $g_\mu(1) = \mu$, $g_\mu^2(1) = \rho . \mu, \ldots, g_\mu^{n_0}(1) = \rho^{n_0} . \mu$ and $g_{\tilde{\mu}}^{n_0}(1) = g_{\tilde{\mu}}^{n_0}(\tilde{\mu}) = 1$.

Define, inductively, $G_0(\mu) = g_\mu^{n_0+1}(1) = g_\mu^{n_0}(\mu)$ and $G_k(\mu) = g_\mu(G_{k-1}(\mu))$ for $k \geqslant 1$.

We claim that $\min_\mu G_k'(\mu) \geqslant \rho . \min G_{k-1}'(\mu)$, $k \geqslant 1$.

Indeed

$$G_k'(\mu) = \frac{\partial}{\partial \mu} g_\mu(G_{k-1}(\mu)) + \frac{\partial}{\partial x} g_\mu(G_{k-1}(\mu)) . G_{k-1}'(\mu).$$

As $\frac{\partial}{\partial \mu} g_\mu(G_{k-1}(\mu)) \geqslant 0$ and $\frac{\partial}{\partial x} g_\mu(G_{k-1}(\mu)) \geqslant \rho$ we get

$$G_k'(\mu) \geqslant \rho . G_{k-1}'(\mu) \tag{1}$$

and so we have proved the claim.

Since $G_0'(\mu) \geqslant \rho^{n_0}$, (1) implies

$$G_k'(\mu) \geqslant \rho^{n_0+k} \quad \text{for every } k \geqslant 0. \tag{2}$$

For $\mu \leqslant \tilde{\mu}$ define

$$\tilde{T}_\mu = T_\mu \cup g_\mu^{-1}(T_\mu) \cup \ldots \cup g_\mu^{-n_0+1}(T_\mu).$$

Given $k \geqslant 1$, let $E_k = \{ \mu \in [0, \tilde{\mu}];\ \exists\, 0 \leqslant j < k;\ G_{n_0 j}(\mu) \in \tilde{T}_\mu \}$ and $N(k)$ be the number of connected components of E_k^c. Since $E_k = \{ \mu \in [0, \tilde{\mu}]; \exists\, 0 \leqslant j \leqslant k; g_\mu^{n_0 j}(1) \in \tilde{T}_\mu \}$ and, for each $y \in [0, 1]$, the cardinality of $\{ x \in [0, 1];\ g_\mu^{n_0}(x) = y \}$ has 2 as lower bound and $n_0 + 1$ as upper bound we obtain $N(k) \leqslant (n_0 + 1)^{k+1}$. So E_k^c is covered by at most $(n_0 + 1)^{k+1}$ intervals whose lenght is, by (2), bounded by $\rho^{-n_0 . (k+1)}$. Moreover, if I_k^j, $0 \leqslant j \leqslant (n_0 + 1)^{k+1}$ is a connected component of E_k^c then the restriction of $G_{n_0 . k}$ to I_k^j is an increasing function. Thus

$$\Lambda_{n_0} = \bigcap_{k \geqslant 0} E_k^c$$

is a Cantor set and its limit capacity satisfies

$$c(\Lambda_{n_0}) \leqslant \lim_{k \to \infty} \frac{\log (n_0 + 1)^{k+1}}{\log \rho^{n_0 . (k+1)}}$$

$$= \lim_{k \to \infty} \frac{(k + 1) . \log (n_0 + 1)}{(k + 1) . n_0 . \log \rho} = \frac{\log (n_0 + 1)}{n_0 . \log \rho}.$$

But, for $\bar{\mu} \leqslant \rho^{-n_0} = \tilde{\mu}$, $I_B \cap [0, \bar{\mu}] = \Lambda_{n_0}$ which implies that $c(I_B \cap [0, \bar{\mu}]) = c(\Lambda_0)$ and since $\lim_{n_0 \to \infty} \frac{\log(n_0 + 1)}{n_0} = 0$ we get $\lim_{\bar{\mu} \to 0} c(I_B \cap [0, \bar{\mu}]) = 0$, proving the result. ■

b) Let X_μ be as in the statement of Theorem 2 and suppose $\alpha_0 = \lambda_1/\lambda_2 > 1$. Then for $\mu_0 > 0$ small, $\alpha_\mu = \frac{\lambda_1(\mu)}{\lambda_2(\mu)} > 1$ for every $\mu \in [0, \mu_0]$. As before we can assume $y_\mu = \mu$.

Let $n_0 \in \mathbf{N}$ be such that $\rho_\mu^{-n_0} < \mu_0$ for every $\mu \in [0, \mu_0]$. To each $n > n_0$ let μ_n be so that $\rho_{\mu_n}^n . \mu_n = 1$. Then $F_{\mu_n}^{n+1}(x, 1) = (\rho_{\mu_n}^n . x_{\mu_n}, 1)$ and since $F_{\mu_n}(x, 1) = (x_{\mu_n}, \mu_n)$ for every $0 \leqslant x \leqslant 1$ we obtain $F_{\mu_n}^{n+1}(x_{\mu_n}, \mu_n) = (x_{\mu_n}, \mu_n)$. So, (x_{μ_n}, μ_n) is a periodic orbit of F_{μ_n} corresponding to a homoclinic orbit for X_{μ_n} associated to $\sigma_0(X_{\mu_n})$.

As $\alpha_{\mu_n} > 1$, F_{μ_n} is differentiable at $(x, 1)$ and $DF_{\mu_n}(x, 1) = 0$ for every $0 \leqslant x \leqslant 1$. Thus $DF_{\mu_n}^{n+1}(x_{\mu_n}, \mu_n) = 0$ and (x_{μ_n}, μ_n) is an attracting periodic orbit for F_{μ_n}. We also have $F_{\mu_n}^{n+1}(R_{\mu_n}^0) \subseteq R_{\mu_n}^0$, where $R_{\mu_n}^0 = R_{X_{\mu_n}}$ was defined before. As F_μ varies continuously with μ, we obtain that there is $0 < \tilde{\mu}_n < \mu_n$ such that $F_{\tilde{\mu}_n}^{n+1}(R_{\tilde{\mu}_n}^0) \subset \text{interior}\,(R_{\tilde{\mu}_n}^0)$. Hence, $F_{\tilde{\mu}_n}^{n+1}$ has an attracting fixed point in the *interior* of $R_{\tilde{\mu}_n}^0$ which is also an attracting periodic orbit of $X_{\tilde{\mu}_n}$. Clearly the ω-limit set of $\gamma_0(n)$ is this attracting periodic orbit, where $\gamma_0(n)$ is the separatrix of $\sigma_0(n)$ close, in compact parts, to γ_0. Letting n go to infinity we finish the prove. Notice that for every $\mu \in [\tilde{\mu}_n, \mu_n)$ the vector field X_μ has an attracting periodic orbit and the ω-limit set of $\gamma_0(\mu)$ is this orbit. ■

From now on we assume that the simple singular cycle Λ of X is *expanding*, that is, $\alpha_0 = \lambda_1/\lambda_2 < 1$ where $-\lambda_3 < -\lambda_1 < 0 < \lambda_2$ are the eigenvalues of $DX(\sigma_0)$, σ_0 the singularity contained in Λ.

The next lemma characterizes the vector fields in $\mathscr{U}_H^+$ in this case.

Lemma 5. — The following conditions are equivalent:

(i) $Y \in \mathscr{U}_H^+$, *i.e.*, $\Gamma(Y/\Lambda(Y, U))$ *is* $\sigma_0(Y)$ *plus a transitive hyperbolic set*;
(ii) $\Lambda(Y, U)$ *is a hyperbolic set*;
(iii) $\exists\, n \in \mathbf{N}$ *such that* $F_Y^n(x_Y, y_Y) \notin D_Y = R_Y^0 \cup R_Y$, D_Y *is the domain of* F_Y;
(iv) $(x_Y, y_Y) \notin \Lambda(F_Y, Q^+)$.

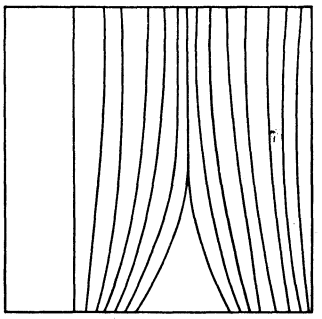

FIG. 5

The fundamental tool for the proof of this lemma is the existence of an invariant unstable cone field for F_Y, $Y \in \mathscr{U} \backslash \mathscr{U}^-$, and consequently, of an invariant unstable foliation $\mathscr{F}^u_Y$ for F_Y. This foliation is obtained by the F_Y-foward saturation of a foliation $\mathscr{G}_Y$ of the fundamental domain for F_Y which looks like the one on figure 5. The foliation $\mathscr{F}^u_Y$ is singular because through the F_Y-orbit of (x_Y, y_Y) there are infinitely many leaves.

The proof of the existence of such unstable cone field is contained in Lemma 2. We point out that for $\alpha_Y < 1$, the proof ends at inequality (2) of Lemma 2. These remarks together with Lemma 3 easily imply Lemma 5.

Proof of Theorems 4 and 5.

Let $\mathscr{U}$, $\mathscr{U}^-$, $\mathscr{U}^+$ and $\mathscr{N}$ be as in Theorem 1. By lemma 1, after a C^1 change of coordinates, we can assume that the horizontal lines $y =$ constant in Q^+ form a stable foliation $\mathscr{F}^s_Y$ for F_Y, for every $Y \in \mathscr{U}^+ \cup \mathscr{N}$. Recall that $\mathscr{U}^+_H$ is the set of $Y \in \mathscr{U}^+$ such that $\Lambda(Y, U)$ is hyperbolic and $\mathscr{U}^+_B = \mathscr{U}^+ \backslash \mathscr{U}^+_H$. Given $X \in \mathscr{U}^+_B$, we shall prove that there exists a C^1 codimension-one submanifold $\mathscr{N}_X$ such that the dynamics of $\Lambda(Y, U)$ for every $Y \in \mathscr{N}_X$ is, up to a topological equivalence, the same. In order to prove this, let us first fix some notation.

To each $Y \in \mathscr{U}^+_B$ and $(x_0, y_0) \in \Lambda(F_Y, Q^+)$ define

$$W^s_Y(x_0, y_0) = \{(x, y) \in Q^+;\ \| F^n_Y(x, y) - F^n_Y(x_0, y_0)\| \to 0 \text{ as } n \to \infty\}.$$

Clearly $W^s_Y(x_0, y_0) \supseteq \{(x, y_0);\ 0 \leqslant x \leqslant 1\}$. Recall that $\{(x, y_0);\ 0 \leqslant x \leqslant 1\}$ is the stable leaf of $\mathscr{F}^s_Y$ at (x_0, y_0). Moreover, there exists $\delta_0 > 0$ such that

$$W^s_{Y, \delta_0}(x_0, y_0) = \{(x, y);\ \| F^n_Y(x, y) - F^n_Y(x_0, y_0)\| \leqslant \delta_0,\ \forall\, n \geqslant 0\} \subseteq \{(x, y_0);\ 0 \leqslant x \leqslant 1\}.$$

Here $\|(x, y)\| = \max\{|x|, |y|\}$ and $B((x, y), r)$ is the ball of radius r and center (x, y).

Set $p_0(Y) = (x_Y, y_Y)$ and $P_n(Y) = F^n_Y(P_0(Y)) = (x^n_Y, y^n_Y)$ for $n > 0$. Take $X \in \mathscr{U}^+_B$ so that $p_0(X) \in \Lambda(F_Y, Q^+)$. For $\delta > 0$ fixed and Y nearby X define

$$W_\delta(X, Y) = \{(x, y) \in Q^+;\ \| F^n_Y(x, y) - p_n(X)\| < \delta,\ \forall\, n \geqslant 0\},$$

that is, $W_\delta(X, Y)$ is the set of points in Q^+ whose F_Y-orbit δ-shadows the F_X-orbit of $p_0(X)$. The next lemma shows that if the F_X-orbit of $p_0(X)$ is at a distance δ from $\{(x, 1),\ 0 \leqslant x \leqslant 1\}$, then $W_\delta(X, Y)$ is nonempty for Y nearby X.

Lemma 6. — Suppose that there exists $\delta > 0$ such that $|y^n_X - 1| > \delta$ for every $n \geqslant 0$. Then $W_\delta(X, Y)$ is nonempty for Y nearby X and it depends smoothly on Y.

Proof. — Under the hypothesis of the lemma we have that $B(p_n(X), \delta) \subseteq Q$ for every $n \geqslant 0$.

Clearly $W_\delta(X, Y) = \bigcap_{n \geqslant 0} F_Y^{-n}(B(p_n(X), \delta))$.

But $\alpha_X < 1$ implies that F_X^{-1} contracts vertical segments and since it always expands

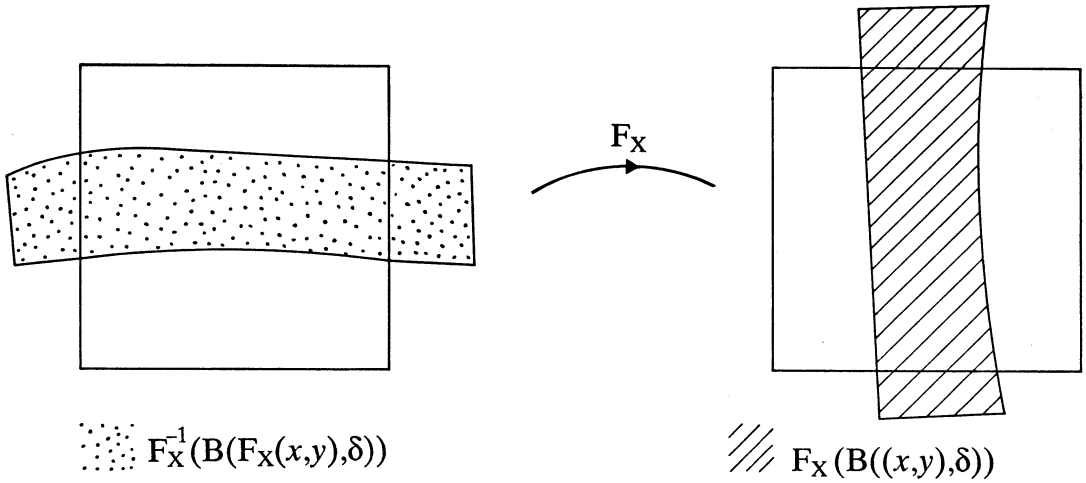

FIG. 6

horizontal segments, we obtain that for every $(x,y) \in \Lambda(F_X, Q^+)$, $F_X^{-1}(B(F_X(x,y), \delta))$ is a horizontal strip. See figure 6.

If $\mathscr{V}$ is a small neighborhood of X then for every $Y \in \mathscr{V}$, $F_Y^{-1}(B(F_X(x,y), \delta))$ is also a horizontal strip, near $F_X^{-1}(B(F_X(x,y), \delta))$. This implies that the sequence $B(p_0(X), \delta) \cap F_Y^{-n}(B(p_n(X), \delta))$ is a nested sequence of horizontal strips for $Y \in \mathscr{V}$. So $W_\delta(X, Y)$ is nonempty and it also depends smoothly on Y. ■

Let us now suppose that $\sup\{y_X^n, n \geqslant 0\} = 1$. In this case it could happen that for every $\delta > 0$ there exists Y arbitrarily near X with $W_\delta(X, Y) = \Phi$. This is so because it could occur that $F_Y^{-n}(B(p_n(X), \delta)) \cap Q^+ = \Phi$ for some n. To bypass this difficulty we define a fake return map $\widetilde{F}_Y$, much related to F_Y, in such way that it always induces a fake C^1 curve $\widetilde{W}_\delta(X, Y)$ as above. We shall also prove that if $(x_Y, y_Y) = p_0(Y) \in \widetilde{W}_\delta(X, Y)$ then $W_\delta(X, Y)$ exists and it coincides with $\widetilde{W}_\delta(X, Y)$.

In order to define $\widetilde{F}_Y$ recall that the domain D_Y of F_Y for $Y \in \mathscr{U}$ is $R_Y \cup R_Y^0$ where $R_Y = \{(x,y) \in Q;\ 0 \leqslant x \leqslant 1,\ -\rho_Y^{-1} \leqslant y \leqslant \rho_Y^{-1}\}$, $R_Y^0 = \{(x,y) \in Q;\ 0 \leqslant x \leqslant 1,\ 1 - \theta \leqslant y \leqslant 1\}$ and θ satisfies $\theta - \varepsilon \geqslant \delta_Y$ for some $\varepsilon > 0$, $\delta_Y = A_Y . y_Y^{1/\alpha_Y}$. Also recall that $F_Y(x, 1 - \delta_Y)$ is contained in $W^s(\sigma_1(Y))$ and $F_Y(x, 1) = (x_Y, y_Y)$ for every $0 \leqslant x \leqslant 1$.

Let $\widetilde{R}_Y^0 = \{(x,y) \in Q;\ 0 \leqslant x \leqslant 1,\ 1 - \theta \leqslant y \leqslant 1 + \theta\}$ and consider

$$T_Y(x,y) = \begin{cases} (x,y) & \text{if } y \leqslant 1 \\ (x, 2 - y) & \text{if } y \geqslant 1, \end{cases}$$

$$T_Y^0(x,y) = \begin{cases} (x,y) & \text{if } y \geqslant y_Y \\ (x, 2y_Y - y) & \text{if } y \leqslant y_Y. \end{cases}$$

The fake return map $\widetilde{F}_Y$ is defined by

$$\widetilde{F}_Y(x,y) = \begin{cases} F_Y(x,y) & \text{if } (x,y) \in R_Y \cup R_Y^0 \\ T_Y^0 \circ F_Y \circ T_Y(x,y) & \text{if } (x,y) \in \widetilde{R}_Y^0 \setminus R_Y^0. \end{cases}$$

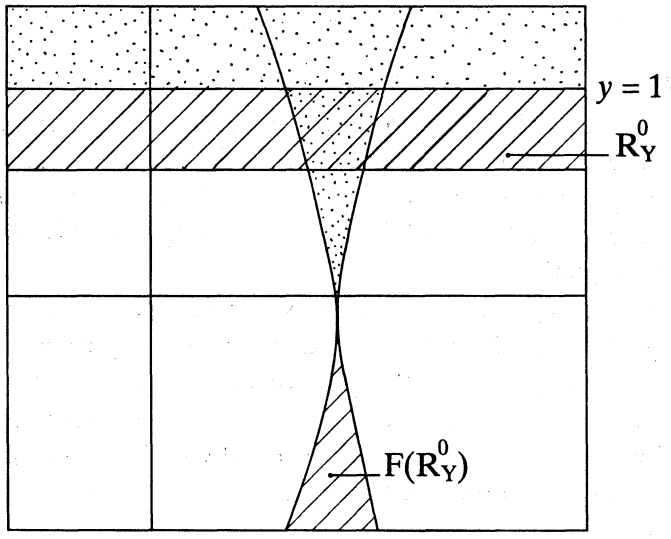

FIG. 7

Observe that the family of horizontal lines in $\widetilde{D}_Y = R_Y \cup \widetilde{R}_Y^0$ is an invariant stable foliation $\widetilde{\mathscr{F}}_Y^s$ for $\widetilde{F}_Y$, $\widetilde{F}_Y$ is an extension of F_Y depending C^1 on Y and $\widetilde{F}_Y$ also expands the vertical direction.

For $\delta > 0$ define

$$\widetilde{W}_\delta(X, Y) = \{(x, y) \in Q;\ \| \widetilde{F}_Y^n(x, y) - p_n(X) \| \leqslant \delta,\ n \geqslant 0\}.$$

Shrinking $\mathscr{U}$ if necessary we prove, as in lemma 6, the following.

Lemma 7. — If $\delta < \delta_0$ then $\widetilde{W}_\delta(X, Y)$ is nonempty for every $Y \in \mathscr{U}$.

Notice that the curves $\widetilde{W}_\delta(X, Y)$ coincide with $W_\delta(X, Y)$ whenever $(x, y) \in \widetilde{W}_\delta(X, Y)$ and $\widetilde{F}_Y^n(x, y) \in R_Y \cup R_Y^0$ for every $n \geqslant 0$. Moreover, $\widetilde{W}_\delta(X, Y)$ depends smoothly on Y.

Let $\mathscr{N}_X = \{Y \in \mathscr{U};\ p_0(Y) \in \widetilde{W}_\delta(X, Y)\}$. We claim that N_X is a codimension-one submanifold defined on a neighborhood $\mathscr{U}_X \subset \mathscr{U}$ of X. Furthermore, for every $\widetilde{X} \in \mathscr{U}_X \cap \mathscr{U}_B^+$, the corresponding $\mathscr{N}_{\widetilde{X}}$ is such that $\mathscr{U}_X \backslash \mathscr{N}_{\widetilde{X}}$ has two connected components. The proof of these facts is a consequence of the implicit function theorem. Indeed, assuming $\widetilde{W}_\delta(\widetilde{X}, Y) = \{(x, y(\widetilde{X}, Y)),\ 0 \leqslant x \leqslant 1\}$ and defining $H(\widetilde{X}, Y) = y(\widetilde{X}; Y) - y_Y$ one has $\mathscr{N}_{\widetilde{X}} = \{Y; H(\widetilde{X}, Y) = 0\}$. Since there exists a direction Y_0 along which $\dfrac{\partial}{\partial Y_0} H(X, X) = \dfrac{d}{ds} H(X, X + sY_0)\big|_{s=0} \neq 0$ the proof of the claim follows.

The next lemma provides a condition implying the coincidence between $\widetilde{W}_\delta(X, Y)$ and $W_\delta(X, Y)$.

Lemma 8. — *If* $p_0(Y) \in \widetilde{W}_\delta(X, Y)$ *then* $\widetilde{W}_\delta(X, Y) = W_\delta(X, Y)$.

Proof. — Suppose first that $p_0(X)$ is an eventually periodic orbit of F_X. Then, the stable leaf through $p_0(X)$ is an eventually periodic leaf of the stable foliation $\mathscr{F}^s_X$ for F_X. This implies that there exists a hyperbolic periodic orbit q of F_X so that $p_0(X) \in W^s(q)$. Let q_Y be the continuation of q for Y in a small neighborhood of X. Then we clearly have $\widetilde{W}_\delta(X, Y) \subseteq W^s(q_Y)$ and $\widetilde{W}_\delta(X, Y) = W_\delta(X, Y)$. In this case $\mathscr{N}_X = \{ Y; p_0(Y) \in W^s(q_Y)\}$.

Now assume that $p_0(X)$ is not eventually periodic. Then $p_0(Y)$ is not eventually periodic for every $Y \in \mathscr{N}_X$. Suppose that there is $Y \in \mathscr{N}_X$ such that $p_i(Y) \in Q$ for $j = 0, 1, \ldots, n_0 - 1$ and $p_{n_0}(Y) = (x_Y^{n_0}, y_Y^{n_0})$ with $y_Y^{n_0} > 1$. Let Y_t, $0 \leqslant t \leqslant 1$, be a C^1 arc contained in $\mathscr{N}_X$, $Y_0 = X$ and $Y_1 = Y$. Then there exists $t_0 \in (0, 1)$ so that $p_{n_0}(Y_{t_0}) \in \{(x, 1), |x| \leqslant 1\}$. Hence, $p_0(Y_{t_0})$ is eventually periodic, which is a contradiction.

Thus, $p_j(Y) \in Q$ for every $j \geqslant 0$ and reasoning as before we obtain

$$\widetilde{W}_\delta(X, Y) = W_\delta(X, Y). \quad \blacksquare$$

Lemmas 6, 7 and 8 prove that if $X_\mu \in \mathscr{A}$ is a C^1 arc such that X_0 has an expanding singular cycle, then $\mathscr{U}_B$ is laminated by codimension-one submanifolds. Moreover, for $\mathscr{U}$ small enough, if $X \in \mathscr{U}_B$ and $\mathscr{N}_X$ is the corresponding submanifold through X, then $\mathscr{U}^+ \backslash \mathscr{N}_X$ has two connected components. To conclude the proof of Theorem 4, it remains to prove that the dynamics of $\Lambda(Y, U)$, $Y \in \mathscr{N}_X$ is topologically equivalent to the dynamics of $\Lambda(X, U)$. To do so we proceed as follows.

Given $Y \in \mathscr{N}_X$, let $g_Y : [0, \rho_Y^{-1}] \cup [1 - \delta_Y, 1] \to [0, 1]$ be the map induced by $\mathscr{F}^s_Y$. As we already saw g_Y is an expanding map, C^1 on $J_Y - \{1\}$, where J_Y is the domain of g_Y. The itinerary $i(g_Y)$ of g_Y is the g_Y-orbit of 1. Since g_X is an expanding map, it follows from [MT] that the itinerary of g_X characterizes the dynamics of g_X, that is, an expanding map $g : J \to [0, 1]$, $J = [0, a] \cup [b, 1]$, $0 < a < b < 1$, is conjugate to g_X if and only if $i(g) = i(g_X)$. But for $Y \in \mathscr{N}_X$ we clearly have $i(g_Y) = i(g_X)$ and so g_Y and g_X are conjugate. This implies that the dynamics of the stable foliations $\mathscr{F}^s_X$ and $\mathscr{F}^s_Y$ for F_X and F_Y, respectively, are conjugate.

As in [LP], to obtain a conjugacy h between $\Lambda(F_X, Q^+)$ and $\Lambda(F_Y, Q^+)$ it remains to prove that the dynamics of the unstable foliations $\mathscr{F}^u_X$ and $\mathscr{F}^u_Y$ for F_X and F_Y, respectively, are conjugate. This follows from the fact that these dynamics are given by nearby expanding maps of the interval.

Since $\Lambda(X, U)$ is the closure of the forward saturation by the flow of X of $\Lambda(F_X, Q^+)$, standard methods (see [LP], [GW]) allow us to extend the homeomorphism already defined on Q^+ to a homeomorphism between $\Lambda(X, U)$ and $\Lambda(Y, U)$ sending orbits of $\Lambda(X, U)$ onto orbits of $\Lambda(Y, U)$, preserving their orientation. This completes the proof of Theorem 4. $\blacksquare$

The proof of Theorem 5 is easy and it is left to the reader.

APPENDIX

Here we shall prove Lemma 1. The stable foliation $\mathscr{F}^s_Y$ will be obtained as the integral curves of a C^1 vector field $\eta_Y : Q^+ \to [-1, 1]$, $\eta_Y(x,y) = (1, \varphi_Y(x,y))$, where φ_Y will be obtained as a fixed point of an appropriated graph transform. In order to define this we start by fixing, for each $Y \in \mathscr{U}\backslash\mathscr{U}^-$, a C^1 nearby horizontal foliation $\mathscr{G}_Y$ in $Q^+\backslash(R_Y \cup R^0_Y)$ containing $\{(x, P_Y^{-1}.\theta_Y(\tau_Y.x));\ x \in [0, 1]\}$ and $\{(x, \theta_Y(x) - \delta_Y(x));\ x \in [0, 1]\}$ as leaves, see Figure 8. We denote by $r(Y, (x,y))$ the inclination of the corresponding leaf passing through the point (x,y) and assume that $(Y, (x,y)) \mapsto r(Y, (x,y))$ is C^1.

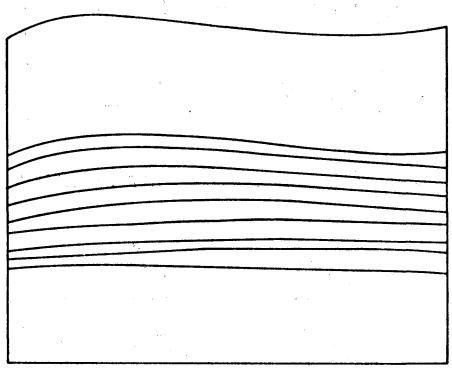

FIG. 8

Consider the space $\mathscr{A}$ of continuous functions $\varphi : (\mathscr{U}\backslash\mathscr{U}^-) \times Q^+ \to [-1, 1]$ satisfying

(i) $\varphi(Y, (x,y)) = r(Y, (x,y))$ if $(x,y) \in Q^+\backslash(R_Y \cup R^0_Y)$;

(ii) $\varphi(Y, (x, \theta_Y(x))) = \theta'_Y(x)$ and $(\varphi(Y, (x, 0)) = 0$ for every $x \in [0, 1]$.

To each $\varphi \in \mathscr{A}$ we associate a continuous vector field

$$\eta^\varphi(Y, (x,y)) = (0, (1, \varphi_Y(Y, (x,y)))$$

and by integrating η^φ we obtain a C^0 foliation $\mathscr{F}^\varphi$ of $(\mathscr{U}\backslash\mathscr{U}^-) \times Q^+$ such that

(i) each leaf of $\mathscr{F}^\varphi$ has the form $\{Y\} \times \mathscr{F}^\varphi_Y(x,y)$ where $\mathscr{F}^\varphi_Y(x,y)$ is a curve in Q^+ passing through (x,y);

(ii) for $(x,y) \in Q^+\backslash(R_Y \cup R^0_Y)$, $\mathscr{F}^\varphi_Y(x,y)$ coincides with the leaf $\mathscr{G}_Y(x,y)$ of $\mathscr{G}_Y$ passing through (x,y);

(iii) for each $Y \in (\mathscr{U}\backslash\mathscr{U}^-)$, $\{(x, \theta_Y(x));\ x \in [0, 1]\}$, $\{(x, \rho_Y^{-1}.\theta_Y(\tau_Y.x));\ x \in [0, 1]\}$, $\{(x, \theta_Y(x) - \delta_Y(x));\ x \in [0, 1]\}$ and $\{(x, 0);\ x \in [0, 1]\}$ are leaves of $\mathscr{F}_Y$.

Now we define an operator $T : \mathscr{A} \to \mathscr{A}$ in such a way that having $T(\varphi) = \varphi$ is equivalent to $\mathscr{F}^{\varphi}$ being invariant under the map $F^{-1}(Y, (x,y)) = (Y, F_Y^{-1}(x,y))$. Since, for $(x,y) \in \operatorname{Dom} F_Y = R_Y \cup R_Y^0$,

$$DF_{(Y,(x,y))} = \begin{bmatrix} \mathrm{Id} & 0 & 0 \\ * & \frac{\partial}{\partial x} f_Y(x,y) & \frac{\partial}{\partial y} f_Y(x,y) \\ * & \frac{\partial g}{\partial x} g_Y(x,y) & \frac{\partial}{\partial y} g_Y(x,y) \end{bmatrix},$$

where $F_Y(x,y) = (f_Y(x,y), g_Y(x,y))$, we have

$$DF^{-1}_{(Y,(x,y))} \cdot \eta^{\varphi}(F(Y, (x,y)))$$

$$= \frac{1}{\Delta} \begin{bmatrix} \mathrm{Id} & 0 & 0 \\ * & \frac{\partial}{\partial y} g_Y(x,y) & -\frac{\partial}{\partial y} f_Y(x,y) \\ * & -\frac{\partial}{\partial x} g_Y(x,y) & \frac{\partial}{\partial x} f_Y(x,y) \end{bmatrix} \begin{bmatrix} 0 \\ 1 \\ \varphi(F(Y, (x,y))) \end{bmatrix},$$

with $\Delta = \det DF_{(Y,(x,y))}$. Hence $\mathscr{F}^{\varphi}$ is invariant if and only if for every $(x,y) \in \operatorname{Dom} F_Y$,

$$\varphi(Y, (x,y)) = \frac{-\frac{\partial}{\partial x} g_Y(x,y) + \frac{\partial}{\partial x} f_Y(x,y) \cdot \varphi(F(Y, (x,y)))}{\frac{\partial}{\partial y} g_Y(x,y) - \frac{\partial}{\partial y} f_Y(x,y) \cdot \varphi(F(Y, (x,y)))}.$$

We denote by $r^{\varphi}(Y, (x,y))$ the right-hand term in this equality and define $T : \mathscr{A} \to \mathscr{A}$ by

$$T(\varphi)\,(Y, (x,y)) = \begin{cases} r^{\varphi}(Y, (x,y)) & \text{if } (x,y) \in \operatorname{Dom} F_Y \\ r(Y, (x,y)) & \text{if } (x,y) \notin \operatorname{Dom} F_Y \end{cases}$$

In order to prove that T has a fixed point we endow $\mathscr{A}$ with the norm of the supremum and prove that T is a contraction with respect to this norm. Afterwards we shall prove that the fixed point of T is in fact C^1, completing the proof of Lemma 1.

(i) $T(\mathscr{A}) \subset \mathscr{A}$.

The continuity of $T(\varphi)(Y, (x,y))$ outside the graph θ_Y is clear. Along this curve it follows observing that *d)* of the expression for F_Y (see Section II) implies that $T(\varphi)(Y, (x,y))$ converges to $\frac{-c(x,y)}{d(x,y)}$ when (x,y) tends to graph θ_Y. As $\frac{-c(x,y)}{d(x,y)}$ is the inclination along graph θ_Y we obtain the result.

We now prove that $|r^{\varphi}(Y, (x,y))| \leqslant 1$ for every $(x,y) \in \mathrm{Dom}\, F_Y$, $Y \in \mathscr{U} \backslash \mathscr{U}^-$. For $(x,y) \in R_Y$,

$$|T(\varphi)(Y, (x,y))| = \frac{|\tau_Y . \varphi \circ F(Y, (x,y))|}{|\rho_Y|} \leqslant 1.$$

If $(x,y) \in R_Y^0$, using *d)* of the expression for $F_Y(x,y)$ given in Section II we obtain

$$|I| \equiv \left| -\frac{\partial}{\partial x} g_Y(x,y) + \varphi \circ F(Y, (x,y)) . \frac{\partial}{\partial x} f_Y(x,y) \right|$$

$$\leqslant |c| . |\tilde{d}| \left[1 + \frac{|\tilde{b}|}{|\tilde{d}|} \right] . x_2^{\alpha_Y - 1} + |r_I(x,y)|$$

$$|II| \equiv \left| -\frac{\partial}{\partial x} g_Y(x,y) + \varphi \circ F(Y, (x,y)) . \frac{\partial}{\partial x} f_Y(x,y) \right|$$

$$\leqslant |c| . |\tilde{d}| \left[1 - \frac{|\tilde{b}|}{|\tilde{d}|} \right] . x_2^{\alpha_Y - 1} + |r_{II}(x,y)|$$

where $|r_I(x,y)|$ and $|r_{II}(x,y)|$ are bounded by constant$.x_2^{\beta_Y - 1}$. Therefore,

$$\frac{|I|}{|II|} \leqslant \frac{|c|}{|d|} \frac{[1 + |\tilde{b}|/|\tilde{d}|] + \varepsilon}{[1 - |\tilde{b}|/|\tilde{d}|] - \varepsilon}, \qquad \varepsilon > 0 \text{ small.}$$

But, as explained at *a)* and *b)* in the expression for F_Y given in Section II, $|\tilde{b}|/|\tilde{d}|$ can be choosen as small as we want and $|c|/|d|$ were also fixed smaller than ε, with $\varepsilon \ll 1$. So, for $(x,y) \in R_Y^0$,

$$|r^{\varphi}(Y, (x,y))| \equiv \frac{|I|}{|II|} < 1.$$

Thus $|\varphi| \leqslant 1$ implies $|T(\varphi)| \leqslant 1$ as we claimed.

(ii) T is a contraction.

We have

$$(T(\varphi_1) - T(\varphi_2))(Y, (x,y))$$

$$= \frac{\left(\frac{\partial}{\partial x} f_Y . \frac{\partial}{\partial y} g_Y - \frac{\partial}{\partial y} f_Y . \frac{\partial}{\partial x} g_Y\right)(\varphi_1 \circ F - \varphi_2 \circ F)}{\left(\frac{\partial}{\partial y} f_Y - \varphi_1 \circ F . \frac{\partial}{\partial y} g_Y\right) . \left(\frac{\partial}{\partial y} g_Y - \varphi_2 \circ F . \frac{\partial}{\partial y} f_Y\right)} (x,y)$$

$$= \frac{\det DF_Y . (\varphi_1 \circ F - \varphi_2 \circ F)}{\left(\frac{\partial}{\partial y} g_Y - \varphi_1 \circ F . \frac{\partial}{\partial y} f_Y\right) . \left(\frac{\partial}{\partial y} g_Y - \varphi_2 \circ F . \frac{\partial}{\partial y} f_Y\right)} (x,y).$$

If $(x, y) \in R_Y$ we have $|(T(\varphi_1) - T(\varphi_2))(Y, (x, y))| = \frac{|\tau_Y|}{|\rho_Y|} |\varphi_1 \circ F - \varphi_2 \circ F|$ and $|\tau_Y| < |\rho_Y|$.

If $(x, y) \in R_Y^0$ then using *a)*, *b)*, *c)* and *d)* of the expression for F_Y one obtain

$$|\tilde{I}| \equiv |\det DF_Y(x, y)| \leqslant \text{constant}.x_2^{\beta_Y + \alpha_Y - 1},$$

$$|\tilde{II}| \equiv \left| \left(\frac{\partial}{\partial y} g_Y - \varphi_1 \circ F.\frac{\partial}{\partial y} f_Y\right).\left(\frac{\partial}{\partial y} g_Y - \varphi_2 \circ F.\frac{\partial}{\partial y} f_Y\right)(x, y) \right|$$

$$\geqslant \alpha_Y^2.|d|^2.|\tilde{d}|^2.\left(1 - \frac{|\tilde{b}|^2}{|\tilde{d}|^2}\right).x_2^{2\alpha_Y - 2} - |s(x, y)|, |s(x, y)|$$

$$\leqslant \text{const}.x_2^{\beta_Y + \alpha_Y - 2}.$$

Thus $\frac{|\tilde{I}|}{|\tilde{II}|} \leqslant \text{constant}.x_2^{\beta_Y - \alpha_Y + 1}$. As $\beta_Y - \alpha_Y > 0$ for every Y we obtain $\frac{|\tilde{I}|}{|\tilde{II}|} \leqslant \frac{1}{2}$. This proves that T has a unique fixed point φ_0. In order to prove that φ_0 is of class C^1 we proceed as follows. Define

$$\tilde{\mathscr{A}} = \{ A \in C^0((\mathscr{U} \backslash \mathscr{U}^-) \times Q^+, L(\mathbf{R}^2, \mathbf{R})); \quad A = Dr(Y, (x, y)) \text{ for } (x, y) \in Q^+ \backslash R_Y \cup R_Y^0 \}.$$

Here $Dr(Y, (x, y))$ means $\frac{\partial}{\partial(x, y)} r(Y, (x, y))$ where $r(Y, (x, y))$ is the inclination field of the foliation $\mathscr{G}_Y$ defined and fixed above.

We now introduce an operator $\tilde{T} : \mathscr{A} \times \tilde{\mathscr{A}} \to \mathscr{A} \times \tilde{\mathscr{A}}$ such that if f, g are of class C^2 and φ is of class C^1 then $\tilde{T}(\varphi, D\varphi) = (T\varphi, D(T\varphi))$. This operator is defined as $\tilde{T}(\varphi, A) = (T\varphi, S(\varphi, A))$ and the explicit form of $S(\varphi, A)$ is $\left(\text{denoting} f_x = \frac{\partial}{\partial x} f_Y, \text{ etc.}\right)$.

$$S(\varphi, A) = \begin{cases} \dfrac{[(g_y - \varphi \circ F.f_y)(-Dg_x + f_x.A \circ F.DF + \varphi \circ F.Df_x) - (-g_x + \varphi \circ F.f_x)(Dg_y - f_y.A \circ F.DF - \varphi \circ F.Df_y)]}{(g_y - \varphi \circ F.f_y)^2} \\ \text{for } (x, y) \in R_Y \cup R_Y^0 \\ Dr(Y, (x, y)) \quad \text{for } (x, y) \notin R_Y \cup R_Y^0, \end{cases}$$

where Dh means $\frac{\partial h}{\partial(x, y)}$ for $h = g_x, g_y, F$, etc.

Note that if $\tilde{T}$ has a globally attracting fixed point (φ_0, A_0), then choosing φ of class C^1 we obtain $\tilde{T}^n(\varphi, D\varphi) = (T^n \varphi, D(T^n \varphi)) \to (\varphi_0, D\varphi_0)$ as n goes to ∞. This implies that $A_0 = D\varphi_0$ and so φ_0 is of class C^1. Thus, to conclude the proof of the lemma it remains to show first that $\tilde{T}$ is a well defined operator and secondly that it has such

an attracting fixed point. For this last point it is enough to show that each map $\widetilde{T}_\varphi : \widetilde{\mathscr{A}} \to \widetilde{\mathscr{A}}$, $\widetilde{T}_\varphi(A) = S(\varphi, A)$ is a contraction, with constant of contraction uniform on $\varphi \in \mathscr{A}$.

To see that $\widetilde{T}$ is a well-defined operator involves a standard calculation and we will not do it here. But it is possible to prove, using *d)* of the expression for F_Y and the fact that $\beta_Y - \alpha_Y > 0$ that

(i) $|S(\varphi_1, A)(x,y) - S(\varphi_2, A)(x,y)| \leqslant \text{constant}\,|\varphi_1 - \varphi_2|$ and

(ii) $S(\varphi, A)(x,y)$ converges to $D\left(\dfrac{-c(x,y)}{d(x,y)}\right)$ as (x,y) tends to graph θ_Y.

We now prove that $\widetilde{T}$ is a contraction. Observe that

$$|\widetilde{T}_\varphi(A) - \widetilde{T}_\varphi(B)| = \frac{|f_x . g_x - f_y . g_x|}{|(g_y - \varphi \circ F . f_y)^2|}\,|(A \circ F - B \circ F)| . |DF|$$

$$= \frac{(\det DF) . |DF|}{|g_y - \varphi \circ F . f_y|^2}(A \circ F - B \circ F).$$

For $(x,y) \in R_Y$ we have

$$|\widetilde{T}_\varphi(A) - \widetilde{T}_\varphi(B)| = |\tau_Y| . |A \circ F - B \circ F| \quad \text{and} \quad |\tau_Y| < 1.$$

For $(x,y) \in R_Y^0$ we have

$$|\hat{I}| \equiv |\det DF| . |DF| \leqslant \text{constant} . x_2^{\beta_Y + \alpha_Y - 1} . x_2^{\alpha_Y - 1}$$

$$|\widehat{II}| \equiv |(g_y - \varphi \circ F . f_y)|^2 \geqslant \alpha_Y^2 . |d|^2 . |\widetilde{d}|^2 (1 - K\,|\widetilde{b}|^2 / |\widetilde{d}|^2) . x_2^{2\alpha_Y - 2} - |t_Y(x,y)|$$

with $|t_Y(x,y)| \leqslant \text{constant} . x_2^{\beta_Y + \alpha_Y - 2}$.

It follows that $\dfrac{|\hat{I}|}{|\widehat{II}|} \leqslant \text{constant} . x_2^{\beta_Y} \leqslant \dfrac{1}{2}$. Thus $\widetilde{T}_\varphi$ is a contraction with constant of contraction independent of φ. This proves the lemma. ■

REFERENCES

[AS] V. S. Afraimovitch and L. P. Sil'nikov, On attainable transitions from Morse-Smale systems to systems with many periodic motions, *Math. USSR Izvestija*, **8** (1974), 1235-1270.

[GW] J. Guckenheimer and R. Williams, Structural stability of Lorenz attractors, *Publ. Math. IHES*, **50** (1979), 59-72.

[LP] R. Labarca and M. J. Pacífico, Stability of singular horseshoes, *Topology*, **25** (1986), 337-352.

[MT] J. Milnor and W. Thurston, *On iterated maps on the interval*, I, II, Preprints, Princeton, 1977.

[NP1] S. Newhouse and J. Palis, Bifurcations of Morse-Smale Dynamical Systems, *Dynamical Systems*, edited by M. M. Peixoto, Academic Press, 303-366, 1973.

[NP2] S. Newhouse and J. Palis, Cycles and bifurcation theory, *Astérisque*, **31** (1976), 43-140.

[NPT] S. Newhouse, J. Palis and F. Takens, Bifurcations and stability of families of diffeomorphisms, *Publ. Math. IHES*, **57** (1983), 5-72.

[PT] J. Palis and F. Takens, Cycles and measure of bifurcation sets for two dimensional diffeomorphisms *Inventiones Math.*, **82** (1985), 397-422.

[PR] M. J. Pacífico and A. Rovella, Contracting singular cycles, *Ann. Ec. Norm. Sup.*, to appear.

[S] S. Sternberg, On the structure of local homeomorphisms of euclidean n-space II, *Am. J. Math.*, **80** (1958), 623-631.

R. B.
Departamento de Matematica
Universidad de Chile
Casilla 653, Santiago, Chile

R. L.
Departamento de Matematica y CC
Universidad de Santiago de Chile
Casilla 307, Correo 2, Santiago, Chile

R. M.
IMPA
Estrada Dona Castorina, 110
Cep 22460, Rio de Janeiro, RJ, Brasil

M. J. P.
Departamento de Matematica Aplicada
Instituto de Matematica — UFRJ
Caixa Postal 68530, Cep 21910
Rio de Janeiro, RJ, Brasil

Manuscrit reçu le 16 décembre 1991.