ISSN 0012-9593

quatrième série - tome 43 *fascicule 1* *janvier-février 2010*

ANNALES SCIENTIFIQUES de L'ÉCOLE NORMALE SUPÉRIEURE

Pedro Daniel GONZÁLEZ PÉREZ & Jean-Jacques RISLER

Multi-Harnack smoothings of real plane branches

SOCIÉTÉ MATHÉMATIQUE DE FRANCE

Ann. Scient. Éc. Norm. Sup.
4e série, t. 43, 2010, p. 143 à 184

MULTI-HARNACK SMOOTHINGS OF REAL PLANE BRANCHES

BY PEDRO DANIEL GONZÁLEZ PÉREZ
AND JEAN-JACQUES RISLER

ABSTRACT. – Let $\Delta \subset \mathbf{R}^2$ be an integral convex polygon. G. Mikhalkin introduced the notion of *Harnack curves*, a class of real algebraic curves, defined by polynomials supported on Δ and contained in the corresponding toric surface. He proved their existence, via *Viro's patchworking* method, and that the topological type of their real parts is unique (and determined by Δ). This paper is concerned with the description of the analogous statement in the case of a smoothing of a real plane branch $(C, 0)$. We introduce the class of *multi-Harnack* smoothings of $(C, 0)$ by passing through a resolution of singularities of $(C, 0)$ consisting of g monomial maps (where g is the number of characteristic pairs of the branch). A multi-Harnack smoothing is a g-parametrical deformation which arises as the result of a sequence, beginning at the last step of the resolution, consisting of a suitable *Harnack smoothing* (in terms of Mikhalkin's definition) followed by the corresponding monomial blow down. We prove then the unicity of the topological type of a multi-Harnack smoothing. In addition, the multi-Harnack smoothings can be seen as *multi-semi-quasi-homogeneous* in terms of the parameters. Using this property we analyze the asymptotic *multi-scales* of the ovals of a multi-Harnack smoothing. We prove that these scales characterize and are characterized by the equisingularity class of the branch.

RÉSUMÉ. – Soit $\Delta \subset \mathbf{R}^2$ un polygone convexe à sommets entiers ; G. Mikhalkin a défini les « courbes de Harnack » (définies par un polynôme de support contenu dans Δ et plongées dans la surface torique correspondante) et montré leur existence (via la « méthode du patchwork de Viro ») ainsi que l'unicité de leur type topologique plongé (qui est determiné par Δ). Le but de cet article est de montrer un résultat analogue pour la lissification (*smoothing*) d'un germe de branche réelle plane (C, O) analytique réelle. On définit pour cela une classe de *smoothings* dite « Multi-Harnack » à l'aide de la résolution des singularités constituée d'une suite de g éclatements toriques, si g est le nombre de paires de Puiseux de la branche (C, O). Un *smoothing* multi-Harnack est réalisé de la manière suivante : à chaque étape de la résolution (en commençant par la dernière) et de manière successive, un *smoothing* « De Harnack » (au sens de Mikhalkin) intermédiaire est obtenu par la méthode de Viro. On montre alors l'unicité du type topologique de tels *smoothings*. De plus, on peut supposer ces *smoothings* « multi-semi-quasi homogènes » ; on montre alors que des propriétés métriques (« multi-taille » des ovales) de tels *smoothings* sont caractérisées en fonction de la classe d'équisingularité de (C, O) et que réciproquement ces tailles caractérisent la classe d'équisingularité de la branche.

The first author is supported by *Programa Ramón y Cajal* and MTM2007-6798-C02-02 grants of *Ministerio de Educación y Ciencia*, Spain.

0012-9593/01/© 2010 Société Mathématique de France. Tous droits réservés

Introduction

The 16th problem of Hilbert addresses the determination and the understanding of the possible topological types of smooth real algebraic curves of a given degree in the projective plane $\mathbf{R}P^2$. This paper is concerned with a local version of this problem: given a germ $(C,0)$ of real algebraic plane curve singularity, determine the possible topological types of the smoothings of C. A *smoothing* of C is a real analytic family of plane curves C_t for $t \in [0,1]$, such that $C_0 = C$ and for $0 < t \ll 1$ the curve $C_t \cap B$ is nonsingular and transversal to the boundary of a Milnor ball B of the singularity $(C,0)$. In this case the real part $\mathbf{R}C_t$ of C_t intersected with the interior of B consists of finitely many ovals and non-compact components.

In the algebraic case it was shown by Harnack that a real plane projective curve of degree d has at most $\frac{1}{2}(d-1)(d-2)+1$ connected components. A smooth curve with this number of components is called a M-curve. In the local case there is a similar bound, which arises from the application of the classical topological theory of Smith. A smoothing which reaches this bound on the number of connected components is called a M-smoothing. It should be noticed that in the local case M-smoothings do not always exist (see [17]). One relevant open problem in the theory is to determine the actual maximal number of components of a smoothing of $(C,0)$, for C running in a suitable form of equisingularity class refining the classical notion of Zariski of equisingularity class in the complex case (see [19]).

Quite recently Mikhalkin proved a beautiful topological rigidity property of those M-curves in $\mathbf{R}P^2$ which are embedded in *maximal position* with respect to the coordinate lines (see [22] and Section 4). His result, which holds more generally, for those M-curves in projective toric surfaces which are cyclically in maximal position with respect to the toric coordinate lines, is proved by analyzing the topological properties of the associated amoebas. The *amoeba* of a curve $C \subset (\mathbf{C}^*)^2$ is the image of it by the map $\mathrm{Log} : (\mathbf{C}^*)^2 \to \mathbf{R}^2$, given by $(x,y) \mapsto (\log|x|, \log|y|)$. Conceptually, the amoebas are intermediate objects which lay in between classical algebraic curves and tropical curves. See [5, 8, 14, 15, 22, 23, 28] for more on this notion and its applications.

In this paper we study smoothings of a *real plane branch* singularity $(C,0)$, *i.e.*, C is a real algebraic plane curve such that the germ $(C,0)$ is analytically irreducible in $(\mathbf{C}^2,0)$. Risler proved that any such germ $(C,0)$ admits an M-smoothing with the maximal number ovals, namely $\frac{1}{2}\mu(C)_0$, where μ denotes the Milnor number. The technique used, called nowadays the blow-up method, is a generalization of the classical Harnack construction of M-curves by small perturbations, which uses the components of the exceptional divisor as a basis of rank one (see [30], [18] and [19]). One of our motivations was to study to which extent Mikhalkin's result holds for smoothings of singular points of real algebraic plane curves, particularly for *Harnack smoothings*, those M-smoothings which are in maximal position with good oscillation with respect to two coordinates lines through the singular point.

We develop a new construction of smoothings of a real plane branch $(C,0)$ by using Viro's patchworking method (see [16, 35, 36, 37, 38], see also [8, 15, 31] for an exposition and [3, 32, 33, 34] for some generalizations). Since real plane branches are Newton degenerate in general, we cannot apply patchworking method directly. Instead we apply the patchworking method for certain *Newton non-degenerate* curve singularities with several branches which

are defined by *semi-quasi-homogeneous* (sqh) power series. These singularities appear as a result of iterating deformations of the strict transforms $(C^{(j)}, o_j)$ of the branch at certain infinitely near points o_j of the embedded resolution of singularities of $(C, 0)$. Our method yields multi-parametric deformations, which we call *multi-semi-quasi-homogeneous* (msqh), and provides simultaneously msqh-smoothings of the strict transforms $(C^{(j)}, o_j)$. We exhibit suitable hypotheses which characterize M-smoothings for this class of deformations in terms of the existence of certain M-curves and Harnack curves in projective toric surfaces (see Theorem 9.1).

We introduce the notion of *multi-Harnack smoothings*, those Harnack smoothings such that the msqh-M-smoothings of the strict transforms $C^{(j)}$ appearing in the process are again Harnack. We prove that any real plane branch C admits a multi-Harnack smoothing. For this purpose we prove first the existence of Harnack smoothings of singularities defined by certain sqh-series (see Proposition 5.8). One of our main results states that multi-Harnack smoothings of a real plane branch $(C, 0)$ have a unique topological type which depends only on the complex equisingular class of $(C, 0)$ (see Theorem 9.4). In particular multi-Harnack smoothings do not have nested ovals. Theorem 9.4 can be understood as a local version of Mikhalkin's Theorem (see Theorem 4.1). The proof is based on Theorem 9.1 and on an extension of Mikhalkin's result for Harnack smoothings of certain non-degenerate singular points (Theorem 5.2). We also analyze certain multi-scaled regions containing the ovals (see Theorem 10.1). The phenomena is quite analog to the analysis of the asymptotic concentration of the curvature of the Milnor fibers in the complex case, due to García Barroso and Teissier [7].

It is a challenge for the future to extend as possible the techniques and results of this paper to the constructions of smoothings of other singular points of real plane curves.

The paper is organized as follows. In Section 1 we introduce some definitions and notations; in Sections 2 and 3 we introduce the patchworking method, also in the toric context; we recall Mikhalkin's result on Harnack curves in projective toric surfaces in Section 4; in Section 5 we recall the notion of smoothings of real plane curve singular points and we determine the topological types of Harnack smoothings of singularities defined by certain non-degenerate semi-quasi-homogeneous polynomials (see Theorem 5.2). In Section 6 we recall the construction of a toric resolution of a plane branch. In Section 8 we describe some geometrical features of the patchworking method for the sqh-smoothings. In Sections 9 and 10, after introducing the notion of msqh-smoothing, we prove the main results of the paper: the characterization of M-msqh-smoothings and multi-Harnack smoothings in Theorem 9.1 and Corollary 9.2, the characterization of the topological type of multi-Harnack smoothings in Theorem 9.4 and the description of the asymptotic multi-scales of the ovals in Theorem 10.1. Finally, in the last section we analyse two more examples in detail.

1. Basic notations and definitions

A *real algebraic* (resp. *analytic*) *variety* is a complex algebraic (resp. analytic) variety V equipped with an anti-holomorphic involution η; we denote by $\mathbf{R}V$ its real part *i.e.*, the set of points of V fixed by η. For instance, a real algebraic plane curve $C \subset \mathbf{C}^2$ is a complex plane curve which is invariant under complex conjugation.

In this paper the term *polygon* (resp. *polyhedron*) means a convex polygon (resp. polyhedron) with integral vertices. We use the following notations and definitions.

If $F = \sum_\alpha c_\alpha x^\alpha \in \mathbf{C}[x]$ (resp. $F \in \mathbf{C}\{x\}$) for $x = (x_1, \dots, x_n)$ the *Newton polygon* of F (resp. the *local Newton polygon*) is the convex hull in $\mathbf{R}^n$ of the set $\{\alpha \mid c_\alpha \neq 0\}$ (resp. of $\cup_{c_\alpha \neq 0} \alpha + \mathbf{R}^n_{\geq 0}$); if the local Newton polyhedron of F meets all the coordinate axes, the *Newton diagram* of F is the region bounded by the local Newton polyhedron of F and the coordinate hyperplanes. If $\Lambda \subset \mathbf{R}^n$ we denote by F^Λ the *symbolic restriction* $F^\Lambda := \sum_{\alpha \in \Lambda \cap \mathbf{Z}^n} c_\alpha x^\alpha$.

If $P \in \mathbf{C}\{x, y\}$ and Λ is an edge of the local Newton polygon of P then P^Λ is of the form:

$$P^\Lambda = c x^a y^b \prod_{i=1}^{e} (y^n - \alpha_i x^m), \tag{1}$$

where $c \neq 0$, $a, b \in \mathbf{Z}_{\geq 0}$, and the integers $n, m \geq 0$ are coprime. The numbers $\alpha_1, \dots, \alpha_e \in \mathbf{C}^*$ are called *peripheral roots of P along the edge* Λ or *peripheral roots of* P^Λ.

The polynomial $P \in \mathbf{R}[x, y]$ is *non-degenerate* (resp. *real non-degenerate*) with respect to its Newton polygon if for any compact face Λ of it we have that $P^\Lambda = 0$ defines a nonsingular subset of $(\mathbf{C}^*)^2$ (resp. of $(\mathbf{R}^*)^2$). In particular, if Λ is an edge of the Newton polygon of P the peripheral roots (resp. the real peripheral roots) of P^Λ are distinct. Notice that the non-degeneracy (resp. real non-degeneracy) of P implies that $P = 0$ defines a non-singular subset of $(\mathbf{C}^*)^2$ (resp. of $(\mathbf{R}^*)^2$). We say that $P \in \mathbf{R}\{x, y\}$ is *non-degenerate* (resp. *real non-degenerate*) with respect to its local Newton polygon if for any edge Λ of it the equation $P^\Lambda = 0$ defines a nonsingular subset of $(\mathbf{C}^*)^2$ (resp. of $(\mathbf{R}^*)^2$). The notion of non-degeneracy with respect to the Newton polyhedra extends for polynomials of more than two variables (see [20]).

A series $H \in \mathbf{R}\{x, y\}$, with $H(0) = 0$ is *semi-quasi-homogeneous* (sqh) if its local Newton polygon has only one compact edge.

If $Q \in \mathbf{R}\{t, x, y\}$ we abuse of notation by denoting Q_t the series in x, y obtained by specializing Q at t in a neighborhood of the origin.

2. The real part of a projective toric variety

We introduce basic notations and facts on the geometry of toric varieties. We refer the reader to [8], [25] and [6] for proofs and more general statements. For simplicity we state the notations only for surfaces.

To a two dimensional polygon Θ is associated a projective toric variety $Z(\Theta)$. The algebraic torus $(\mathbf{C}^*)^2$ is embedded as an open dense subset of $Z(\Theta)$, and acts on $Z(\Theta)$ in a way which extends the group operation on the torus. There is a one to one correspondence between the faces of Θ and the orbits of the torus action which preserves the dimensions and the inclusions of the closures. If Λ is a one dimensional face of Θ we denote by $Z(\Lambda) \subset Z(\Theta)$ the associated orbit closure. The set $Z(\Lambda)$ is a complex projective line embedded in $Z(\Theta)$. These lines are called the *coordinate lines* of $Z(\Theta)$. The intersection of two coordinate lines $Z(\Lambda_1)$ and $Z(\Lambda_2)$ reduces to a point which is a zero-dimensional orbit (resp. is empty) if and only if the edges Λ_1 and Λ_2 intersect (resp. otherwise). The surface $Z(\Theta)$ may have singular points only at the zero-dimensional orbits. The algebraic real torus $(\mathbf{R}^*)^2$ is embedded as an

open dense subset of the real part $\mathbf{R}Z(\Theta)$ of $Z(\Theta)$ and acts on it. The orbits of this action are just the real parts of the orbits for the complex algebraic torus action. For instance if Θ is the simplex with vertices $(0,0)$, $(0,d)$ and $(d,0)$ then the surface $Z(\Theta)$ with its coordinate lines is the complex projective plane with the classical three coordinate axes.

NOTATION 2.1

(i) *Denote by $\mathscr{S} \cong (\mathbf{Z}/2\mathbf{Z})^2$ the group consisting of the orthogonal symmetries of $\mathbf{R}^2$ with respect to the coordinate lines, namely the elements of $\mathscr{S}$ are $\rho_{i,j} : \mathbf{R}^2 \to \mathbf{R}^2$, where $\rho_{i,j}(x,y) = ((-1)^i x, (-1)^j y)$ for $(i,j) \in \mathbf{Z}^2$. If Λ is an edge of Θ and if $n = (u,v)$ is a primitive integral vector orthogonal to Λ we denote by ρ_Λ the element $\rho_{u,v}$ of $\mathscr{S}$.*

(ii) *We use the notation $\mathbf{R}^2_{i,j}$ for the quadrant $\rho_{i,j}(\mathbf{R}^2_{\geq 0})$, for $(i,j) \in \mathbf{Z}^2$.*

(iii) *If $A \subset \mathbf{R}^2_{\geq 0}$ we denote by $\tilde{A}$ the union $\tilde{A} := \bigcup_{\rho \in \mathscr{S}} \rho(A) \subset \mathbf{R}^2$.*

(iv) *We denote by $\sim$ the equivalence relation in the set $\tilde{\Theta}$, which for each edge Λ of Θ, identifies a point in $\tilde{\Lambda}$ with its symmetric image by ρ_Λ. Set $\tilde{B}/_\sim$ for the image of a set $B \subset \Theta$ in $\tilde{\Theta}/_\sim$.*

The image of the *moment map* $\phi_\Theta : (\mathbf{C}^*)^2 \to \mathbf{R}^2$,

$$(x,y) \mapsto \left(\sum_{\alpha_k = (i,j), \alpha_k \in \Theta \cap \mathbf{Z}^2} |x^i y^j| \right)^{-1} \left(\sum_{\alpha_k = (i,j), \alpha_k \in \Theta \cap \mathbf{Z}^2} |x^i y^j| (i,j) \right), \tag{2}$$

is the interior, $\mathrm{int}\Theta$, of the polygon Θ. The restriction $\phi^+_\Theta := \phi_{\Theta|\mathbf{R}^2_{>0}}$ is a diffeomorphism onto the interior of Θ. The map ϕ^+_Θ extends to a diffeomorphism: $\tilde{\phi}_\Theta : (\mathbf{R}^*)^2 \to \widetilde{\mathrm{int}(\Theta)}$ by setting $\tilde{\phi}_\Theta(\rho(x)) := \rho(\phi(x))$, for $x \in \mathbf{R}^2_{>0}$ and $\rho \in \mathscr{S}$.

The real part of a normal projective toric variety can be described topologically by using the moment maps (see [25] Proposition 1.8, [8], Chapter 11, Theorem 5.4, and [15] Theorem 2.11 for more details and precise statements). In particular, we have:

PROPOSITION 2.2. – *There is a stratified homeomorphism $\Psi_\Theta : \tilde{\Theta}/_\sim \to \mathbf{R}Z(\Theta)$ such that for any face Λ of Θ the restriction $\Psi_{\Theta|\tilde{\Lambda}/_\sim} : \tilde{\Lambda}/_\sim \to \mathbf{R}Z(\Theta)$ defines an homeomorphism, denoted by Ψ_Λ, onto its image $\mathbf{R}Z(\Lambda) \subset \mathbf{R}Z(\Theta)$.*

A polynomial $P \in \mathbf{R}[x,y]$ with Newton polygon contained in Θ defines a global section of the line bundle $\mathscr{O}(D_\Theta)$ associated to the polygon Θ on the toric surface $Z(\Theta)$ (see [25] or [6]). The polynomial P defines a real algebraic curve C in the real toric surface $Z(\Theta)$ which does not pass through any 0-dimensional orbit. If C is smooth its genus coincides with the number of integral points in the interior of Θ, see [12]. The curve C is a M-curve if C is non-singular and $\mathbf{R}C$ has the maximal number $1 + \#(\,\mathrm{int}\Theta) \cap \mathbf{Z}^2$ of connected components. If Λ is an edge of Θ the intersection of C with the coordinate line $Z(\Lambda)$ is given by the zero locus of P^Λ viewed in $Z(\Lambda)$ (which we denote by $\{P^\Lambda = 0\}$). The number of zeroes of P^Λ in the projective line $Z(\Lambda)$, counted with multiplicity, is equal to the *integral length* of the segment Λ, *i.e.*, one plus the number of integral points in the interior of Λ. This holds since these zeroes are the image of the peripheral roots of P^Λ by the embedding map $\mathbf{C}^* \hookrightarrow Z(\Lambda)$. We abuse sometimes of terminology by identifying the peripheral roots of P^Λ with the zero locus of P^Λ in the projective line $Z(\Lambda)$.

3. Patchworking real algebraic curves

Patchworking is a method introduced by Viro for constructing real algebraic hypersurfaces (see [16, 35, 36, 37, 38], see also [8, 15, 31] for an exposition and [3, 32, 33, 34] for some generalizations).

DEFINITION 3.1. – *Let $\Theta \subset \mathbf{R}^2_{\geq 0}$ be a two dimensional polygon. Let $Q \in \mathbf{R}[x,y]$ define a real algebraic curve C then the Θ-chart $\mathrm{Ch}_\Theta(C)$ of C is the closure of $\mathrm{Ch}^*_\Theta(C) := \tilde{\phi}_\Theta(\mathbf{R}C \cap (\mathbf{R}^*)^2)$ in $\tilde{\Theta}$.*

If Θ is the Newton polygon of Q we often denote $\mathrm{Ch}_\Theta(C)$ by $\mathrm{Ch}(Q)$ or by $\mathrm{Ch}(C)$ if the coordinates used are clear from the context.

Let $\Lambda \subset \mathbf{R}^2_{\geq 0}$ be a one dimensional polygon and denote by $(a,b) \in \mathbf{Z}^2$ the primitive integral vector parallel to Λ. If the Newton polygon of $P \in \mathbf{R}[x,y]$ is equal to Λ, then $P = x^{a'}y^{b'}p(x^a y^b)$ for p a polynomial in one variable with non zero constant term and $a', b' \in \mathbf{Z}$. Let $J \subset \mathbf{R}_{\geq 0}$ be the Newton polygon of p; then there are natural affine identifications $j : J \to \Lambda$ and $\tilde{j} : \tilde{J} \to \tilde{\Lambda}/_\sim$ where $\tilde{J} = J \cup (-J) \subset \mathbf{R}$. The moment map in the one dimensional case gives a map $\tilde{\phi}_\Lambda = \tilde{j} \circ \tilde{\phi}_J : \mathbf{R}^* \to \tilde{\Lambda}/_\sim$. The Λ-*chart of* P is defined by $\mathrm{Ch}_\Lambda(P) := \pi_\Lambda^{-1}(\tilde{\phi}_\Lambda(\{P=0\} \cap (\mathbf{R})^*))$ where $\pi_\Lambda : \tilde{\Lambda} \to \tilde{\Lambda}/_\sim$ is the canonical map. Notice that $\mathrm{Ch}_\Lambda(P)$ consist of twice the number of real peripheral roots of P along the edge Λ.

Let Q be a polynomial in $\mathbf{R}[x,y]$ with a two dimensional Newton polygon Θ. If Q is real non-degenerate with respect to its Newton polygon Θ then for any face Λ of Θ we have that $\mathrm{Ch}_\Theta(Q) \cap \tilde{\Lambda} = \mathrm{Ch}_\Lambda(Q^\Lambda)$ and the intersection $\mathrm{Ch}_\Theta(Q) \cap \tilde{\Lambda}$ is transversal (as stratified sets).

NOTATION 3.2. – *Let $P = \sum A_{i,j}(t)x^i y^j \in \mathbf{R}[t,x,y]$ be a polynomial.*

(i) *We denote by $\hat{\Theta} \subset \mathbf{R} \times \mathbf{R}^2$ the Newton polytope of P and by $\Theta \subset \mathbf{R}^2$ the Newton polygon of P_t for $0 < t \ll 1$.*
(ii) *We denote by $\hat{\Theta}_c$ the* lower part *of $\hat{\Theta}$,* i.e.*, the union of compact faces of the Minkowski sum $\hat{\Theta} + (\mathbf{R}_{\geq 0} \times \{(0,0)\})$.*
(iii) *The restriction of the second projection $\mathbf{R} \times \mathbf{R}^2 \to \mathbf{R}^2$ to $\hat{\Theta}_c$ induces a finite polyhedral subdivision Θ' of Θ. The inverse function $\omega : \Theta \to \hat{\Theta}_c$ is a* convex function *which is affine on any cell of the subdivision Θ'. Any cell Λ of the subdivision Θ' corresponds by this function to a face $\hat{\Lambda}$ of $\hat{\Theta}$ contained in $\hat{\Theta}_c$, of the same dimension and the converse also holds.*
(iv) *If Λ is a cell of Θ' we denote by $P_1^{\hat{\Lambda}}$ or by $P_{t=1}^{\hat{\Lambda}}$ the polynomial in $\mathbf{R}[x,y]$ obtained by substituting $t=1$ in $P_t^{\hat{\Lambda}}$.*

A subdivision Θ' of the polygon Θ of the form indicated in Notation 3.2 is called *convex*, *regular* or *coherent*.

THEOREM 3.1. – *With Notation 3.2, if for each face $\hat{\Lambda}$ of $\hat{\Theta}$ contained in $\hat{\Theta}_c$ the polynomial $P_1^{\hat{\Lambda}}$ is real non-degenerate with respect to Λ, then for $0 < t \ll 1$ the pair $(\tilde{\Theta}, \mathrm{Ch}_\Theta(P_t))$ is stratified homeomorphic to $(\tilde{\Theta}, \tilde{C})$, where $\tilde{C} = \bigcup_{\Lambda \in \Theta'} \mathrm{Ch}_\Lambda(P_1^{\hat{\Lambda}})$.*

REMARK 3.3. – *The statement of Theorem 3.1 above is a slight generalization of the original result of Viro in which the deformation is of the form* $\sum A_{i,j}t^{\omega(i,j)}x^iy^j$*, for some real coefficients* $A_{i,j}$*. The same proof generalizes without relevant changes to the case presented here, when we may add terms* $b_{kij}t^kx^iy^j$ *with* $b_{kij} \in \mathbf{R}$ *and exponents* (k,i,j) *contained in* $(\hat{\Theta} + \mathbf{R}_{\geq 0} \times \{(0,0)\}) \setminus \hat{\Theta}_c$.

By Proposition 2.2 an extension of Theorem 3.1 provides a method to construct real algebraic curves in the projective toric surface $Z(\Theta)$. The chart of the curve C in $Z(\Theta)$ is by definition the image $\mathrm{Ch}_\Theta(C)/_\sim$ of $\mathrm{Ch}_\Theta(C)$ in $\tilde{\Theta}/_\sim$ (where $\sim$ is the equivalence relation defined in Notation 2.1).

REMARK 3.4. – *The statement of Theorem 3.1 holds also when the pairs* $(\tilde{\Theta}, \mathrm{Ch}_\Theta(P_t))$ *and* $(\tilde{\Theta}, \tilde{C})$ *are replaced respectively by* $(\tilde{\Theta}/_\sim, \mathrm{Ch}_\Theta(P_t)/_\sim)$ *and* $(\tilde{\Theta}/_\sim, \tilde{C}/_\sim)$ *(cf. Notation 2.1).*

DEFINITION 3.5

(i) *Let* $\Theta \subset \mathbf{R}^2$ *be a polygon. A convex polyhedral subdivision* Θ' *of* Θ *is a* primitive triangulation *if the two dimensional cells of the subdivision are triangles of area* $1/2$ *with respect to the standard volume form induced by a basis of the lattice* $\mathbf{Z}^2$.

(ii) *The patchworking of charts of Theorem 3.1 is called* combinatorial *if the subdivision* Θ' *is a primitive triangulation.*

Notice that Θ' is a primitive triangulation if and only if all the integral points of Θ are vertices of the subdivision Θ'.

The charts of a combinatorial patchworking are determined by the subdivision Θ' and the *distribution of signs* $\epsilon : \Theta \cap \mathbf{Z}^2 \to \{\pm 1\}$, given by the signs of the terms appearing in $P_t^{\hat{\Theta}_c}$. The map ϵ extends to $\tilde{\epsilon} : \tilde{\Theta} \cap \mathbf{Z}^2 \to \{\pm 1\}$, by setting $\tilde{\epsilon}(r,s) = (-1)^{ir+js}\epsilon \circ \rho_{i,j}(r,s)$ whenever $\rho_{i,j}(r,s) \in \mathbf{Z}^2_{\geq 0}$, *i.e.*, if $(-1)^i r \geq 0$ and $(-1)^j s \geq 0$. If Λ is a triangle of the primitive subdivision Θ' the chart $\mathrm{Ch}_\Lambda(P_1^{\hat{\Lambda}})$ restricted to one of the symmetric copies of Λ is empty if all the signs are equal; otherwise it is isotopic to segment dividing the triangle into two parts, each one containing only vertices of the same sign. See [8, 13, 16].

REMARK 3.6. – *Let* $w : \mathbf{R}^2 \to \mathbf{R}$ *be a* strictly convex function *taking integral values on* $\Theta \cap \mathbf{Z}^2$*. For instance, we can consider a polynomial function* $w(x,y)$*, where* w *is a polynomial of degree two with integral coefficients, such that its level sets define ellipses. Denote by* $\hat{\Theta}^w$ *the convex hull of* $\{(w(i,j),i,j) \mid (i,j) \in \Theta \cap \mathbf{Z}^2\} + \mathbf{R}_{\geq 0} \times \{(0,0)\}$ *and by* $\hat{\Theta}^w_c$ *the union of compact faces of the polyhedron* $\hat{\Theta}^w$*. The projection* $\hat{\Theta}^w_c \to \Theta$ *given by* $(k,i,j) \mapsto (i,j)$ *is a bijection. The inverse of this map is a piece-wise affine convex function* $\omega : \Theta \to \mathbf{R}_{\geq 0}$ *taking integral values on* $\Theta \cap \mathbf{Z}^2$ *and such that the maximal sets of affinity are the triangles of a primitive triangulation of* Θ.

4. Harnack curves in projective toric surfaces

If $L_1, \dots, L_n \subset \mathbf{R}P^2$ are real lines several authors have studied the possible topological types of the triples $(\mathbf{R}P^2, \mathbf{R}C, \mathbf{R}L_1 \cup \cdots \cup \mathbf{R}L_n)$ for those M-curves C of degree d in *maximal position* with respect to the lines (see Definition 4.1 below). For $n = 1$ the classification reduces to the topological classification of maximal curves in the real affine plane (which is open for $d > 5$). For $n = 2$ there are several constructions of M-curves of degree $d \geq 4$ in maximal position with respect to two lines (see [4] and [22] for instance). Mikhalkin proved that for each $d \geq 1$ there is a unique topological type of triples associated to M-curves of degree d in maximal position with respect to three lines. Similar statement holds more generally for real algebraic curves in projective toric surfaces.

In the sequel the term polygon will mean two dimensional polygon.

Definition 4.1. – *Let Θ be a polygon and $C \subset Z(\Theta)$ be a real algebraic curve defined by a polynomial with exponents in $\Theta \cap \mathbf{Z}^2$. We denote by $L_1, \dots, L_m$ the sequence of cyclically incident coordinate lines in the toric surface $Z(\Theta)$.*

(i) *The curve C is in* maximal position with respect to a real line $L \subset Z(\Theta)$ *if the intersection $L \cap C$ is transversal, $L \cap C = \mathbf{R}L \cap \mathbf{R}C$ and $L \cap C$ is contained in one connected component of $\mathbf{R}C$. The curve C has* good oscillation *with respect to the line L if in addition the points of intersection of C with L appear in the same order when viewed in $\mathbf{R}L$ and in the connected component of $\mathbf{R}C$.*

(ii) *The curve C is in* maximal position with respect to the lines $L_1, \dots, L_n$ *for $n \leq m$ if for $i = 1, \dots, n$ the curve C is in maximal position with respect to L_i and there exist n disjoint arcs $\mathbf{a}_1, \dots, \mathbf{a}_n$ contained in the same connected component of $\mathbf{R}C$ such that $C \cap L_i = \mathbf{a}_i \cap \mathbf{R}L_i$, .*

(iii) *The curve C is* cyclically in maximal position *if* (ii) *holds, $n = m$, and if the arc $\mathbf{a}_i$ is followed by $\mathbf{a}_{i+1}$ in the connected component of $\mathbf{R}C$ which intersects the lines, for $i = 1, \dots, m-1$.*

(iv) *The curve C is* Harnack *if it is a M-curve cyclically in maximal position with respect to the coordinate lines of $Z(\Theta)$.*

We have the following result of Mikhalkin (see [22]).

Theorem 4.1. – *Let Θ be a polygon and C a Harnack curve in $Z(\Theta)$. Denote by $(\mathbf{R}^*)^2$ the algebraic real torus embedded in $\mathbf{R}Z(\Theta)$. Then the topological type of the pair $(\mathbf{R}Z(\Theta), \mathbf{R}C \cap (\mathbf{R}^*)^2)$ depends only on Θ.*

Remark 4.2. – *A Harnack curve C in $Z(\Theta)$ is a M-curve defined by a real non-degenerate polynomial $P \in \mathbf{R}[x, y]$ with Newton polygon Θ such that for any edge Λ of Θ the peripheral roots of P^Λ are real and of the same sign.*

If C defines a Harnack curve in $Z(\Theta)$ we denote by Ω_C the unique connected component of $\mathbf{R}C$ which intersects the coordinate lines and by U_C the set $\cup B_k$, where B_k runs through the connected components of the set $(\mathbf{R}^*)^2 \setminus \Omega_C$ whose boundary meets at most two coordinate lines. The open set U_C is bounded by Ω_C and the coordinate lines of the toric surface.

The following proposition, which is a reformulation of the results of Mikhalkin [22], describes completely the topological type of the real part of a Harnack curve in a toric surface. See Figure 3 below for an example.

PROPOSITION 4.3. – *If C defines a Harnack curve in $Z(\Theta)$ then C is cyclically in maximal position with good oscillation with respect to the coordinate lines of the toric surface $Z(\Theta)$. Moreover, the set of connected components of $\mathbf{R}C \cap (\mathbf{R}^*)^2$ can be labelled as $\{\Omega_{r,s}\}_{(r,s)\in\Theta\cap\mathbf{Z}^2}$ in such a way that:*

(i) *There exists a unique $(i,j) \in \mathbf{Z}_2^2$ such that the inclusion $\Omega_{r,s} \subset \rho_{i,j}(\mathbf{R}^2_{s,r})$ holds for $(r,s) \in \Theta \cap \mathbf{Z}^2$.*
(ii) *The set of components $\{\Omega_{r,s}\}_{(r,s)\in\mathrm{int}\Theta}$ consists of non nested ovals in $(\mathbf{R}^*)^2 \setminus U_C$.*
(iii) *If $(r,s),(r',s') \in \partial\Theta \cap \mathbf{Z}^2$ then $\overline{\Omega}_{(r,s)} \cap \overline{\Omega}_{(r',s')}$ reduces to a point in $Z(\Lambda)$ if (r,s) and (r',s') are consecutive integral points in Λ, for some edge Λ of Θ and it is empty otherwise.*
(iv) $\Omega_C = \bigcup_{(r,s)\in\partial\Theta\cap\mathbf{Z}^2} \overline{\Omega}_{r,s}$.

The *signed topological type* of a real algebraic curve $C \subset Z(\Theta)$ is given by the topological types of the pairs $(Z(\Theta) \cap \mathbf{R}^2_{i,j}, C \cap \mathbf{R}^2_{i,j})$ for $(i,j) \in \mathbf{Z}_2^2$. By Proposition 4.3 there are four signed topological types of Harnack curves in $Z(\Theta)$, which are related by the symmetries ρ_{ij} of $(\mathbf{R}^*)^2$ for $(i,j) \in \mathbf{Z}_2^2$.

DEFINITION 4.4 (cf. Notation 2.1). – (i) *Let $\epsilon : \mathbf{Z}^2_{\geq 0} \to \{\pm 1\}$ be a distribution of signs. Its extension $\tilde{\epsilon} : \mathbf{Z}^2 \to \{\pm 1\}$ is defined by the formula $\tilde{\epsilon}(\rho_{i,j}(r,s)) = (-1)^{ri+sj}\epsilon(r,s)$, for $(r,s) \in \mathbf{Z}^2_{\geq 0}$ and $i,j \in \{0,1\}^2$.*
(ii) *Set $\epsilon_h : \mathbf{Z}^2_{\geq 0} \to \{\pm 1\}$ for the function $\epsilon_h(r,s) = (-1)^{(r-1)(s-1)}$. The eight distributions of signs, $\pm(-1)^{ri+sj}\epsilon_h(r,s)$ for $i,j \in \{0,1\}^2$ (extended to $\mathbf{Z}^2$ by the above rule) are called* Harnack distributions of signs.
(iii) *A distribution of signs ϵ is compatible with a polynomial $G = \sum c_{ij}x^iy^j \in \mathbf{R}[x,y]$ if* $\mathrm{sign}(c_{ij}) = \epsilon(i,j)$.
(iv) *Let Θ be a polygon. A distribution of signs ϵ on $\tilde{\Theta}$ is* Harnack *if it is the restriction of a Harnack distribution of signs in $\mathbf{Z}^2$.*

REMARK 4.5

(i) *Similarly there are four Harnack distributions of signs $\mathbf{Z} \to \{\pm 1\}$ in dimension one: $\pm\epsilon$ and $\pm\epsilon'$, where*

$$\begin{cases} \epsilon(r) = (-1)^{r-1} & \text{if } r \geq 0, \\ \epsilon(r) = (-1)^{2r-1} & \text{if } r \leq 0, \end{cases} \qquad \begin{cases} \epsilon'(r) = (-1)^{r-1} & \text{if } r \leq 0, \\ \epsilon'(r) = (-1)^{2r-1} & \text{if } r \geq 0. \end{cases}$$

For instance, let $p \in \mathbf{R}[x]$ be a polynomial of degree $n \geq 2$ with n real roots of the same sign (say > 0). Then there is a unique Harnack distribution of signs on $\mathbf{Z}$ which is compatible with p.
(ii) *If $\Lambda \subset \mathbf{R}^2_{\geq 0}$ is a segment with integral vertices one defines analogously a Harnack distribution of signs on $\tilde{\Lambda}/_\sim$ and therefore on $\tilde{\Lambda}$ by pull-back. If Θ is a polygon, Λ is an edge of Θ and ϵ_Λ is a Harnack distribution of signs on $\tilde{\Lambda}$, it is easy to see that there exist exactly two Harnack distributions of signs on Θ which extend ϵ_Λ.*

Proposition 4.6 describes the construction of a Harnack curve in the real toric surface $Z(\Theta)$ by using combinatorial patchworking (see [13] Proposition 3.1 and [22] Corollary A4). Proposition 4.8 give conditions to guarantee the existence of such a Harnack curve if for Λ an edge of Θ, the intersection points with $Z(\Lambda)$ are fixed.

PROPOSITION 4.6. – *Let Θ be a polygon and $P = \sum_{(i,j)\in\Theta\cap\mathbf{Z}^2} \epsilon(i,j)t^{\omega(i,j)}x^iy^j$ be a polynomial such that the subdivision Θ' induced by P is a primitive triangulation of Θ (cf.* Notation 3.2*). If ϵ is a Harnack distribution of signs, then for $0 < t \ll 1$ the equation $P_t = 0$ defines a Harnack curve in $Z(\Theta)$.*

Proof. – Suppose without loss of generality that $\epsilon = \epsilon_h$. Since the triangulation is primitive any triangle T containing a vertex with both even coordinates, which we call even vertex, has the other two vertices with at least one odd coordinate. It follows that the even vertex has a sign different from the one of the other two vertices, which we call odd vertices. If the even vertex is in the interior of Θ then there is necessarily an oval around it, resulting of the combinatorial patchworking. If an odd vertex v is in the interior of Θ, one sees easily that there is a unique symmetry $\rho_{i,j}$ such that $\tilde{\epsilon}_h(\rho_{i,j}(v)) = +1$ and there is an oval around $\rho_{i,j}(v)$ since $\tilde{\epsilon}_h(w) = -1$, for all neighbors w of $\rho_{i,j}(v)$. It follows that there are $\#(\mathrm{int}\Theta)\cap\mathbf{Z}^2$ ovals which do not cut the coordinate lines and exactly one more component which has good oscillation with maximal position with respect to the coordinate lines of $Z(\Theta)$. □

LEMMA 4.7. – *Let $\Theta \subset \mathbf{R}^2_{\geq 0}$ be a two dimensional polygon and Λ an edge of Θ. There exists a piece-wise affine linear convex function $\omega' : \Theta \to \mathbf{R}_{\geq 0}$, which takes integral values on $\Theta \cap \mathbf{Z}^2$, vanishes on $\Lambda \cap \mathbf{Z}^2$ and induces a triangulation of Θ with the following properties:*

(i) *All the integral points in the set $\Theta^- := \Theta \setminus \Lambda$ are vertices of the triangulation.*
(ii) *There exists exactly one triangle T in the triangulation which contains Λ as an edge. The triangle T may be transformed by a translation and a $SL(2,\mathbf{Z})$-transformation into the triangle $[(0,1),(e,0),(0,0)]$.*
(iii) *If $T' \neq T$ is in the triangulation then T' is primitive.*

Proof. – Let $A_1 \in \Theta \setminus \Lambda$ be a closest integral point to the edge Λ. The convex hull of $\Lambda \cup \{A_1\}$ is a triangle $T = A_0A_1A_2$ where $A_k = (i_k, j_k)$ for $k = 0,1,2$ (see Figure 1).

Let us consider a polynomial function $w(i,j)$, defined by a degree two polynomial $w(x,y)$, such that the level sets of $w(i,j)$ are ellipses and $w(i,j) \geq 0$ for $(i,j) \in \Theta$, $w(i_0,j_0) = w(i_2,j_2) < w(i_1,j_1) < w(i,j)$ for $(i,j) \in (\Theta \setminus T) \cap \mathbf{Z}^2$.

By Remark 3.6 we define from $w(x,y)$ a piece-wise affine convex function $\omega : \Theta \to \mathbf{R}$, such that $\omega(i,j) = w(i,j)$ for $(i,j) \in \mathbf{Z}^2 \cap \Theta$. The function ω defines a primitive subdivision of Θ which subdivides the triangle T.

Let $\omega' : T \to \mathbf{R}$ be the unique affine function which coincides with $\omega - \omega(i_0,j_0)$ on the vertices of the triangle T. Setting $\omega'(i,j) = \omega(i,j) - \omega(i_0,j_0)$ for $(i,j) \in \Theta \setminus T$ extends ω' to a convex function on Θ which we denote also by ω'. This function satisfies the required conditions. □

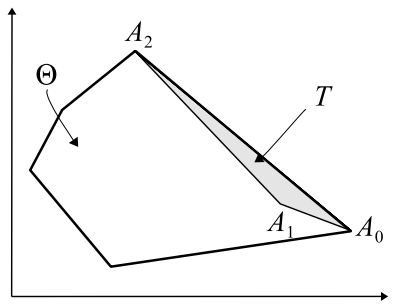

FIGURE 1.

PROPOSITION 4.8. – *Let Λ be an edge of integral length e of a two dimensional polygon $\Theta \subset \mathbf{R}^2_{\geq 0}$. Let $G = \sum_{(i,j)\in\Lambda\cap\mathbf{Z}^2} a_{ij}x^iy^j$ be a polynomial with e peripheral roots of the same sign. Then there exists a polynomial $F \in \mathbf{R}[x,y]$ with Newton polygon Θ such that $F^\Lambda = G$ and the equation $F = 0$ defines a Harnack curve in $Z(\Theta)$.*

Proof. – We denote by ω and ω' the piece-wise affine convex functions introduced in the proof of Lemma 4.7. Since the peripheral roots of G are of the same sign there are two Harnack distributions of signs compatible with G (cf. Remark 4.5). Let ϵ denote one of these distributions. Consider the following polynomials:

$$P = \sum_{(i,j)\in\Theta\cap\mathbf{Z}^2} \epsilon(i,j)t^{\omega(i,j)}x^iy^j \text{ and } P' = \sum_{(i,j)\in(\Theta\setminus\Lambda)\cap\mathbf{Z}^2} \epsilon(i,j)t^{\omega'(i,j)}x^iy^j + G.$$

By Theorem 3.1 and Remark 3.4 the chart of the curve C_t (resp. C'_t) defined by $P_t = 0$ (resp. $P'_t = 0$) on $Z(\Theta)$ is obtained by gluing the charts of P_1^Δ (resp. of $(P')_1^\Delta$) for Δ in the triangulation of Θ defined by P (resp. by P').

The triangle T is transformed by a translation and a $SL(2,\mathbf{Z})$-transformation in a triangle T' with vertices $(0,1)$, $(e,0)$ and $(0,0)$. It follows from this that if $H = (P')_1^T = G + \epsilon(i_1,j_1)x^{i_1}y^{i_1}$ then the topology of the pair $(\tilde{T}, \mathrm{Ch}_\Theta(H))$ is determined by the sign of $\epsilon(i_1,j_1)$ and of the peripheral roots of G.

We deduce from Theorem 3.1 that if $C_T = \cup_{\Delta\subset T}\mathrm{Ch}_\Delta(P_1^D)$ the pairs $(\tilde{T}, \mathrm{Ch}_T(H))$ and $(\tilde{T}, C_T)$ are isotopic.

It follows from these observations that for $0 < t \ll 1$ the curve C'_t defines a Harnack curve in $Z(\Theta)$ since the same holds for C_t by Proposition 4.6. □

REMARK 4.9. – *Suppose that the polynomial $F = \sum_{(i,j)\in\Theta\cap\mathbf{Z}^2} b_{ij}x^iy^j \in \mathbf{R}[x,y]$ satisfies the conclusion of Proposition 4.8 and that the edge Λ of the polygon Θ is contained in a line of equation $ni + mj = k$, where $n, m \in \mathbf{Z}$ and $\gcd(n,m) = 1$. Then the polynomial $F' := (-1)^kF \circ \rho_\Lambda$ verifies also the conclusion of Proposition 4.8. Notice that the signed topological types in $Z(\Theta)$ of the curves $\{F = 0\}$ and $\{F' = 0\}$ are different in general.*

5. Smoothings of real plane singular points

Let $(C,0)$ be a germ of real analytic plane curve with an isolated singular point at the origin. Set $B_\epsilon(0)$ for the ball of center 0 and of radius ϵ. If $0<\epsilon\ll 1$ each branch of $(C,0)$ intersects $\partial B_\epsilon(0)$ transversally along a smooth circle and the same property holds when the radius is decreased (analogous statements hold also for the real part). Then we denote the ball $B_\epsilon(0)$ by $B(C,0)$, and we call it a *Milnor ball* for $(C,0)$. See [24].

A smoothing C_t is a real analytic family C_t of plane analytic curves such that $C_0=C$ and for some $\epsilon>0$ and for $0<t\ll\epsilon$ the curve C_t is nonsingular and transversal to the boundary of a Milnor ball $B(C,0)$. By the connected components of the smoothing C_t we mean the components of the real part $\mathbf{R}C_t$ of C_t in the Milnor ball. These connected components consist of finitely many *ovals* and *non-compact* components (in the interior of the Milnor ball) *i.e.*, those which intersect the boundary of $B(C,0)$.

Definition 5.1

(i) *The* topological type *of a smoothing C_t of a plane curve singularity $(C,0)$ with Milnor ball B is the topological type of the pair* $(\mathbf{R}B,\mathbf{R}C_t\cap\mathbf{R}B)$.

(ii) *The* signed topological type *of a smoothing C_t of a plane curve singularity $(C,0)$ with Milnor ball B with respect to fixed coordinates (x,y) is the collection of topological types of pairs* $(\mathbf{R}B\cap\mathbf{R}^2_{i,j},\mathbf{R}B\cap\mathbf{R}^2_{i,j}\cap\mathbf{R}C_t)$*, for all* $(i,j)\in\{0,1\}^2$ *(see* Notation 2.1*).*

The germ $(C,0)$ is a *real branch* if it is analytically irreducible in $(\mathbf{C}^2,0)$. Denote by r the number of (complex analytic) branches and by $\mu(C)$ the Milnor number of the germ $(C,0)$. The number of non-compact components of a smoothing C_t is equal to $r_{\mathbf{R}}$, the number of *real branches* of $(C,0)$. The number of ovals of a smoothing C_t is $\leq\frac{1}{2}(\mu(C)-r+1)$ if $r_{\mathbf{R}}\geq 1$ and $\leq\frac{1}{2}(\mu(C)-r+3)$ if $r_{\mathbf{R}}=0$ (see [2, 17, 18, 30]). A smoothing is called a M-smoothing if the number of ovals is equal to the bound. The existence of M-smoothings is a quite subtle problem since there exist examples of singularities which do not have an M-smoothing (see [17]). Some types of real plane singularities which do have a M-smoothing are described in [18, 19, 30].

We generalize the notions of *maximal position*, *good oscillation* and *Harnack*, which were introduced in Section 4 for the algebraic case.

Definition 5.2

(i) *A smoothing C_t of $(C,0)$ is in* maximal position *(resp. has* good oscillation*) with respect to a real line L passing through the origin if for $0<t\ll 1$ the intersection $B(C,0)\cap\mathbf{R}C_t\cap\mathbf{R}L$ consists of $(L,C)_0$ different points which are contained in an arc $\mathbf{a}_L\subset\mathbf{R}C_t$ of the smoothing (resp. and in addition the order of these points is the same when they are viewed in the line $\mathbf{R}L$ or in the arc $\mathbf{a}_L$).*

(ii) *A smoothing C_t of $(C,0)$ is in maximal position with respect to the coordinate lines L_1 and L_2 if it is in maximal position with respect to the lines L_1 and L_2 and for $0<t\ll 1$ there are disjoint arcs $\mathbf{a}_{L_1}$ and $\mathbf{a}_{L_2}$ satisfying* (i)*, which are contained in the same connected component of the smoothing C_t.*

(iii) *A* Harnack smoothing *is a M-smoothing which is in maximal position with good oscillation with respect to two coordinate lines such that the connected component of the smoothing which intersect the coordinate lines is non-compact.*

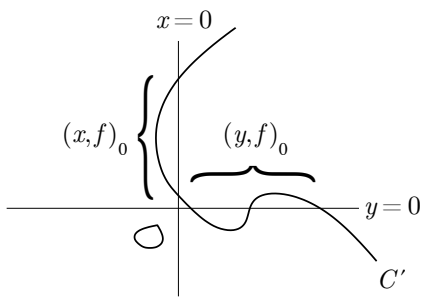

FIGURE 2. A Harnack smoothing of the cusp $y^2 - x^3 = 0$

REMARK 5.3. – *Every real plane branch admits a Harnack smoothing (this result is implicit in the blow-up method of* [30]*).*

Patchworking smoothings of plane curve singularities

Theorem 3.1 applies also to define smoothings of singularities, see [37], [38] and [19].

In the sequel we often use the term *curve* instead of *germ of curve*, confusing by abuse a germ with a suitable representant.

NOTATION 5.4. – *Let $P \in \mathbf{R}\{x,y\}[t]$. For fixed t, denote by C_t the real analytic curve defined by $P_t = 0$. Suppose that C_0 is a curve with a singularity at the origin which does not contain any of the coordinate axes. We denote by Δ the Newton diagram of P_0. We suppose that $P_t(0,0) \neq 0$ for $t \neq 0$. The polynomial P defines a convex subdivision Δ' of Δ in polygons (this subdivision is defined similarly as in the case of Notations 3.2).*

THEOREM 5.1 (O. Viro [35, 37, 38]). – *Let $P \in \mathbf{R}\{x,y\}[t]$ be as in Notation 5.4. Then if $\Lambda_1, \ldots, \Lambda_k$ are the cells of Δ' and if $P_1^{\hat{\Lambda}_i}$ is real non-degenerate with respect to Λ_i for $i = 1, \ldots, k$, then, for $0 < t \ll 1$, C_t defines a smoothing of $(C,0)$ such that the pairs $(\mathbf{R}B(C,0), \mathbf{R}B(C,0) \cap \mathbf{R}C_t)$ and $(\tilde{\Delta}, \bigcup_{i=1}^k \mathrm{Ch}_{\Lambda_i}(P_1^{\hat{\Lambda}_i}))$ are homeomorphic (in a stratified sense).*

REMARK 5.5. – *Notice that the hypotheses of Theorem 5.1 imply that P_0 is real non-degenerate with respect to its local Newton polygon since the edges of the local Newton polygon of P_0 are among the cells of the subdivision Δ' and if Λ is such an edge it is easy to see that $P_1^{\hat{\Lambda}} = P_0^{\Lambda}$.*

DEFINITION 5.6. – *Let $P \in \mathbf{R}\{x,y\}[t]$ be of the form indicated in Notation 5.4. We say that C_t is a* semi-quasi-homogeneous *(sqh) deformation (resp. smoothing) of $(C,0)$ if Δ is the only two dimensional face of the subdivision Δ' (resp. and in addition the polynomial $P_1^{\hat{\Delta}}$ is real non-degenerate).*

Remark that if $P_1^{\hat{\Delta}}$ is real non-degenerate then C_t defines a smoothing of $(C,0)$ by Theorem 5.1. Notice that if C_t is a sqh-deformation the polynomial $P_t^{\hat{\Delta}}$ is quasi-homogeneous as a polynomial in (t,x,y).

NOTATION 5.7. – *Let $P \in \mathbf{R}\{x,y\}[t]$ be of the form indicated in Notation 5.4. If P defines a sqh-deformation then the series $P_0 \in \mathbf{R}\{x,y\}$ has a local Newton polygon with compact edge of the form $\Gamma = [(m,0),(0,n)]$ and Newton diagram $\Delta = [(m,0),(0,n),(0,0)]$. We denote by Δ^- the set $\Delta \setminus \Gamma$. The number $e := \gcd(n,m) \geq 1$ is equal to the integral length of the segment Γ. We set $n_1 = n/e$ and $m_1 = m/e$. The series P_0 is of the form:*

$$P_0 = \prod_{s=1}^{e}(y^{n_1} - \theta_s x^{m_1}) + \cdots, \text{ for some } \theta_s \in \mathbf{C}^*, \tag{3}$$

where the exponents (i,j) of the terms which are not written verify that $ni + mj > nm$.

Proposition 5.8 and Theorem 5.2 are the first new results of the paper and are basic in the developments of our results. Proposition 5.8 is a generalization of Theorem 4.1 (1) of [19], where under the same hypotheses it is proved that a M-smoothing exists.

PROPOSITION 5.8. – *Let $P_0 \in \mathbf{R}\{x,y\}$ be a sqh-series of the form indicated in Formula (3). We suppose that the peripheral roots of P_0 along Γ are all real, different and of the same sign. Let $Q = \sum_{(i,j)\in\Delta^-\cap\mathbf{Z}^2} a_{ij}x^iy^j + P_0^\Gamma$ be a polynomial defining a Harnack curve C in $Z(\Delta)$. Let $\omega : \Delta \to \mathbf{R}$ defined by $\omega(r,s) = nm - nr - ms$. Then,*

$$P_t = \sum_{(i,j)\in\Delta^-\cap\mathbf{Z}^2} t^{\omega(i,j)} a_{ij}x^iy^j + P_0$$

defines a Harnack sqh-smoothing of $\{P_0 = 0\}$ at the origin.

Proof. – By Proposition 4.8 such a polynomial Q exists. We denote by C_t the curve defined by P_t. Using Kouchnirenko's expression for the Milnor number of $(C_0,0)$ (see [20]), we deduce that the bound on the number of connected components (resp. ovals) of a smoothing of $(C_0,0)$ is equal to

$$\#(\mathrm{int}\Delta \cap \mathbf{Z}^2) + e, \quad (\text{resp.}\#(\mathrm{int}\Delta \cap \mathbf{Z}^2)\,). \tag{4}$$

By Theorem 5.1 any oval of the curve C defined by Q on $Z(\Theta) \cap (\mathbf{R}^*)^2$ corresponds to an oval of the smoothing. We use the notation of Proposition 4.3. The smoothing has good oscillation with the coordinate axes, namely, the component of the smoothing which meets the axes corresponds to $\cup_{(0,s)}\Omega_{0,s} \cup \cup_{(r,0)}\Omega_{r,0}$ in the chart of C. It remains $e-1$ non-compact components of the smoothing which correspond to $\Omega_{r,s}$ for $(r,s) \in \mathrm{int}\Lambda \cap \mathbf{Z}^2_{>0}$. □

THEOREM 5.2. – *Let $(C,0)$ be a plane curve singularity defined by a semi-quasi-homogeneous series $P_0 \in \mathbf{R}\{x,y\}$ non-degenerate with respect to its local Newton polygon. We denote by Γ the compact edge of this polygon. We suppose that the peripheral roots of P_0^Γ are all real. Let $P \in \mathbf{R}\{x,y\}[t]$ define a sqh-smoothing C_t of $(C,0)$. We use Notation 5.7 for P. If C_t is a M-smoothing in maximal position with respect to the coordinate lines and in addition, the connected component of the smoothing C_t which intersects the coordinate lines is non-compact, then we have that:*

(i) *The peripheral roots of P_0^Γ are of the same sign.*

(ii) *The polynomial* $P_1^{\hat{\Delta}}$ *defines a Harnack curve in* $Z(\Delta)$.
(iii) *The smoothing* C_t *is Harnack.*
(iv) *There is a unique topological type of pairs* $(\mathbf{R}B, \mathbf{R}B \cap (\mathbf{R}^*)^2 \cap \mathbf{R}C_t)$, *where* B *denotes a Milnor ball for the smoothing* C_t.
(v) *The topological type of the smoothing* C_t *is determined by* Δ.

Proof. – Since the peripheral roots of the polynomial P_0^{Γ} are real the germ $(C, 0)$ has exactly e analytic branches which are real, hence the smoothing C_t has e non-compact components. By hypothesis the smoothing C_t is an M-smoothing hence there are precisely $\#(\mathrm{int}\Delta \cap \mathbf{Z}^2)$ ovals by (4). By hypothesis none of these ovals cuts the coordinate axes.

We consider the curve $\tilde{C}$ defined by the polynomial $P_1^{\hat{\Delta}}$ in the real toric surface $Z(\Delta)$. Theorem 5.1 and Remark 3.4 indicate the relation between the topology of $\mathbf{R}\tilde{C}$ and the topology of $\mathbf{R}C_t \cap \mathbf{R}B$ for $0 < t \ll 1$. By this relation and the hypothesis there are exactly $\#(\mathrm{int}\Delta \cap \mathbf{Z}^2)$ ovals in $\tilde{C} \cap (\mathbf{R}^*)^2$ and the curve $\tilde{C}$ is in maximal position with respect to the two coordinate lines $\{x = 0\}$ and $\{y = 0\}$ of $Z(\Delta)$. It follows that the number of connected components of $\mathbf{R}\tilde{C}$ is $\geq 1 + \#(\mathrm{int}\Delta \cap \mathbf{Z}^2)$. Since this number is actually the maximal possible number of components we deduce that $\tilde{C}$ is a M-curve in $Z(\Delta)$. The non-compact connected components of $\mathbf{R}\tilde{C} \cap (\mathbf{R}^*)^2 \subset Z(\Delta)$ glue up in one connected component of $\mathbf{R}\tilde{C}$. This component contains all the intersection points with the coordinate lines of $Z(\Delta)$, since $\tilde{C}$ is in maximal position with respect to the coordinate lines $\{x = 0\}$ and $\{y = 0\}$, and by assumption the peripheral roots of P_0^{Γ} are all real.

Using Theorem 5.1 and Proposition 2.2 we deduce that there are two disjoint arcs $\mathbf{a}_x$ and $\mathbf{a}_y$ in $\mathbf{R}\tilde{C}$ containing respectively the points of intersection of $\tilde{C}$ with the coordinate lines $\{x = 0\}$ and $\{y = 0\}$ of $Z(\Delta)$, which do not contain any point in $\mathbf{R}Z(\Gamma)$ (otherwise there would be more than one non-compact component of the smoothing C_t intersecting the coordinate axes, contrary to the assumption of maximal position).

It follows from this that the curve $\tilde{C}$ is in maximal position with respect to the coordinate axes of $Z(\Delta)$, which implies (i). Mikhalkin's Theorem 4.1 implies the second assertion. Then the other assertions are deduced from this by Theorem 5.1, Proposition 4.3 and Remark 4.2. □

Remark 5.9. – *With the hypotheses and notation of Theorem 5.2, we have that for* $(i, j) \in \Delta \cap \mathbf{Z}^2$ *the connected components* $\Omega_{i,j}$ *of the chart* $Ch_{\Delta}^*(\tilde{C})$ *(see Definition 3.1) are described by* Proposition 4.3. *If the peripheral roots of* P_0^{Γ} *are positive, up to replacing* P_t^{Δ} *by* $P_t^{\Delta} \circ \rho_{\Gamma}$, *one can always assume that* $\Omega_{0,n} \subset \mathbf{R}^2_{0,0}$ *and then:*

$$\Omega_{r,s} \subset \mathbf{R}^2_{n+s,r}, \quad \forall (r, s) \in \Delta \cap \mathbf{Z}^2. \tag{5}$$

Otherwise we have that $\Omega_{r,s} \subset \rho_{\Gamma}(\mathbf{R}^2_{n+s,r})$, *for all* $(r, s) \in \Delta \cap \mathbf{Z}^2$. *Compare in* Figure 3 *the position of* $\Omega_{0,4}$ *in* (a) *and* (b).

Definition 5.10. – *If* (5) *holds then we say that the signed topological type of the Harnack smoothing* C_t *(or of the chart of* $P_1^{\hat{\Delta}}$*), is* normalized *(cf.* Definition 5.1*).*

As an immediate corollary of Theorem 5.2 we deduce that:

PROPOSITION 5.11. – *There are two signed topological types of sqh-Harnack smoothings of* $(C,0)$. *These types are related by the orthogonal symmetry* ρ_Γ *and only one of them is normalized.*

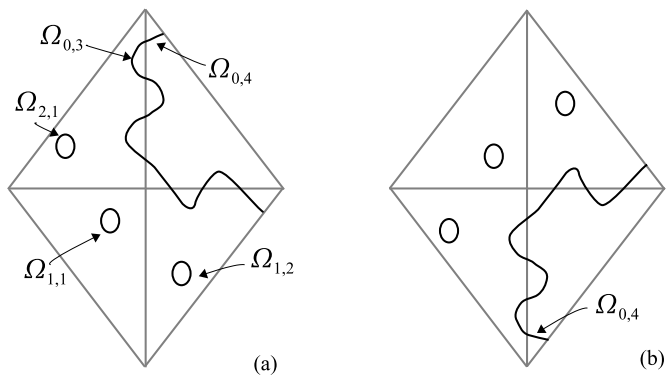

FIGURE 3. Charts of Harnack smoothings of $y^4 - x^3 = 0$. The signed topological type in (a) is normalized

One of the aims of this paper is to study to which extent Theorem 5.2 admits a valid formulation in the class of real plane branch singularities. In general the singularities of this class are Newton degenerate, in particular we cannot apply the patchworking method to those cases. Classically smoothing of this type of singularities is constructed using the blow-up method. We present in the following sections an alternative procedure which applies Viro method at a sequence of certain infinitely near points.

6. Local toric embedded resolution of real plane branches and other plane curve singularities

We recall the construction of a *local toric embedded resolution of singularities* of a real plane branch by a sequence of monomial maps. For a complete description see [1, 11]. See [6, 25] for more on toric geometry and [9, 21, 26, 27] for more on toric geometry and plane curve singularities. At the end of this section we recall also how the same method provides a local embedded resolution of a plane curve singularity defined by a sqh-series, non-degenerate with respect to its local Newton polygon.

We consider first the case of a real plane branch $(C,0)$. We define in the sequel a sequence of birational monomial maps $\pi_j : Z_{j+1} \to Z_j$, where Z_{j+1} is an affine plane $\mathbf{C}^2$ for $j = 1,\dots,g$, such that the composition $\Pi := \pi_1 \circ \cdots \circ \pi_g$ is a local *embedded resolution* of the plane branch $(C,0)$ *i.e.*, Π is an isomorphism over $\mathbf{C}^2 \setminus \{(0,0)\}$ and the *strict transform* C' of C (*i.e.*, the closure of the pre-image by Π^{-1} of the punctured curve $C \setminus \{0\}$), is a smooth curve on Z_{g+1} which intersects the exceptional fiber $\Pi_1^{-1}(0)$ transversally.

A germ $(C,0)$ of real analytic plane curve, defined by $F = 0$ for $F \in \mathbf{R}\{x,y\}$, defines a real plane branch if it is analytically irreducible in $(\mathbf{C}^2,0)$.

We say that $y' \in \mathbf{R}\{x, y\}$ is a *good* coordinate for x and $(C, 0)$ if setting $(x_1, y_1) := (x, y')$ defines a pair of coordinates at the origin such that C is defined by an equation $F(x_1, y_1) = 0$, where $F \in \mathbf{R}\{x_1, y_1\}$ is of the form:

$$F = (y_1^{n_1} - x_1^{m_1})^{e_1} + \cdots, \tag{6}$$

such that $\gcd(n_1, m_1) = 1$, $e_0 := e_1 n_1$ is the intersection multiplicity of $(C, 0)$ with the line, $\{x_1 = 0\}$ and the terms which are not written have exponents (i, j) such that $in_1 + jm_1 > n_1 m_1 e_1$, *i.e.*, they lie above the compact edge $\Gamma_1 := [(0, n_1 e_1), (m_1 e_1, 0)]$ of the local Newton polygon of F.

The vector $\vec{p}_1 = (n_1, m_1)$ is orthogonal to Γ_1 and defines a subdivision of the positive quadrant $\mathbf{R}^2_{\geq 0}$, which is obtained by adding the ray $\vec{p}_1 \mathbf{R}_{\geq 0}$. The quadrant $\mathbf{R}^2_{\geq 0}$ is subdivided in two cones, $\tau_i := \vec{e}_i \mathbf{R}_{\geq 0} + \vec{p}_1 \mathbf{R}_{\geq 0}$, for $i = 1, 2$ and $\vec{e}_1, \vec{e}_2$ the canonical basis of $\mathbf{Z}^2$. We define the *minimal regular subdivision* Σ_1 of $\mathbf{R}^2_{\geq 0}$ which contains the ray $\vec{p}_1 \mathbf{R}_{\geq 0}$ by adding the rays defined by those integral vectors in $\mathbf{R}^2_{>0}$, which belong to the boundary of the convex hull of the sets $(\tau_i \cap \mathbf{Z}^2) \backslash \{0\}$, for $i = 1, 2$. There is a unique cone $\sigma_1 = \vec{p}_1 \mathbf{R}_{\geq 0} + \vec{q}_1 \mathbf{R}_{\geq 0} \in \Sigma_1$ where $\vec{q}_1 = (c_1, d_1)$ satisfies that:

$$c_1 m_1 - d_1 n_1 = 1. \tag{7}$$

See an example in Figure 5. By convenience we denote $\mathbf{C}^2$ by Z_1, and the origin $0 \in \mathbf{C}^2 = Z_1$ by o_1. We also denote F by $F^{(1)}$ and C by $C^{(1)}$. The map $\pi_1 : Z_2 \to Z_1$ is defined by

$$\begin{aligned} x_1 &= u_2^{c_1} x_2^{n_1}, \\ y_1 &= u_2^{d_1} x_2^{m_1}, \end{aligned} \tag{8}$$

where u_2, x_2 are coordinates on $Z_2 = \mathbf{C}^2$. The components of the exceptional fiber $\pi_1^{-1}(0)$ are $\{x_2 = 0\}$ and $\{u_2 = 0\}$.

The pull-back of $C^{(1)}$ by π_1 is defined by $F^{(1)} \circ \pi_1 = 0$. The term $F^{(1)} \circ \pi_1 = 0$ decomposes as:

$$F^{(1)} \circ \pi_1 = \mathrm{Exc}(F^{(1)}, \pi_1) \bar{F}^{(2)}(x_2, u_2), \text{ where } \bar{F}^{(2)}(0, 0) \neq 0, \tag{9}$$

and $\mathrm{Exc}(F^{(1)}, \pi_1) := y_1^{e_0} \circ \pi_1$. The polynomial $\bar{F}^{(2)}(x_2, u_2)$ (resp. $\mathrm{Exc}(F^{(1)}, \pi_1)$) defines the *strict transform* $C^{(2)}$ of $C^{(1)}$ (resp. the *exceptional divisor*). By Formula (6) we find that $\bar{F}^{(2)}(x_2, 0) = 1$ hence $\{u_2 = 0\}$ does not meet the strict transform. Since

$$\bar{F}^{(2)}(0, u_2) = (1 - u_2^{c_1 m_1 - d_1 n_1})^{e_1} \overset{(7)}{=} (1 - u_2)^{e_1},$$

it follows that $\{x_2 = 0\}$ is the only component of the exceptional fiber of π_1 which intersects the strict transform $C^{(2)}$ of $C^{(1)}$, precisely at the point o_2 with coordinates $x_2 = 0$ and $u_2 = 1$, and with intersection multiplicity equal to e_1. If $e_1 = 1$ then the map π_1 is a local embedded resolution of the germ $(C, 0)$. If $e_1 > 1$ we can find a good coordinate y_2 with respect to x_2 and $(C^{(2)}, o_2)$ in such a way that $C^{(2)}$ is defined by the vanishing of a term, which we call *the strict transform function*, of the form:

$$F^{(2)}(x_2, y_2) = (y_2^{n_2} - x_2^{m_2})^{e_2} + \cdots, \tag{10}$$

where $\gcd(n_2, m_2) = 1$, $e_1 = e_2 n_2$ and the terms which are not written have exponents (i, j) such that $in_2 + jm_2 > n_2 m_2 e_1$.

We iterate this procedure defining for $j > 2$ a sequence of monomial birational maps $\pi_{j-1} : Z_j \to Z_{j-1}$, which are described by replacing the index 1 by $j-1$ and the index 2 by j above. In particular when we refer to a formula, like (7) at level j, we mean after making this replacement. Since by construction we have that $e_j \mid e_{j-1} \mid \cdots \mid e_1 \mid e_0$ (for $\mid$ denoting divides), at some step we reach a first integer g such that $e_g = 1$ and then the process stops. The composition $\Pi = \pi_1 \circ \cdots \circ \pi_g$ is a local toric embedded resolution of the germ $(C, 0)$.

REMARK 6.1

(i) *The number g above is the number of characteristic exponents in a Newton-Puiseux parametrization of $(C,0)$ of the form $y_1 = \zeta(x_1^{1/n})$.*

(ii) *The sequence of pairs $\{(n_j, m_j)\}_{j=1}^{g}$ determines and is determined by the* characteristic pairs *of a plane branch (see* [1] *and* [26]*). These pairs classify the* embedded topological type *of the germ $(C,0) \subset (\mathbf{C}^2, 0)$, or equivalently its* equisingularity type.

We denote by $\mathrm{Exc}(F^{(1)}, \pi_1 \circ \cdots \circ \pi_j)$ the *exceptional function* defining the exceptional divisor of the pull-back of C by $\pi_1 \circ \cdots \circ \pi_j$. Notice that

$$\mathrm{Exc}(F^{(1)}, \pi_1 \circ \cdots \circ \pi_j) = (y_1^{e_0} \circ \pi_1 \circ \cdots \circ \pi_j) \cdots (y_j^{e_{j-1}} \circ \pi_j). \tag{11}$$

DEFINITION 6.2. – *Let $2 \leq j \leq g$ and $(D_j, 0)$ be a real analytic branch whose strict transform by $\pi_1 \circ \cdots \circ \pi_{j-1}$ is smooth and transversal to the exceptional divisor at the point $o_j \in \{x_j = 0\}$. The strict transform of $(D_j, 0)$ by $\pi_1 \circ \cdots \circ \pi_{j-1}$ is defined by $y'_j = 0$. The branch $(D_j, 0)$ is a jth-*curvette *for $(C,0)$ and the local coordinate x if in addition y'_j is a good coordinate for $(C^{(j)}, o_j)$ and x_j. See the survey* [29] *for instance, for the notion of curvette and its applications.*

Notice that the sequence of pairs $\{(n'_i, m'_i)\}$ associated to the branch $(D_j, 0)$ by Remark 6.1 is $\{(n_1, m_1), \ldots, (n_{j-1}, m_{j-1})\}$.

REMARK 6.3. – *For $j = 2, \ldots, g$, there always exists a jth-curvette for the real branch $(C,0)$ and x which is real.*

We assume from now on that the coordinate y_j appearing in the local toric resolution is chosen in terms of the strict transform function of a jth-*curvette* for $(C,0)$ and the local coordinate x. We assume that these curvettes are real if $(C,0)$ is real. We fix a notation for the series defining these curves.

NOTATION 6.4. – *We set $f_1 := y_1$. We denote by $f_j \in \mathbf{R}\{x,y\}$ a series such that the equation $f_j = 0$ defines a jth-curvette for $(C,0)$ and such that its strict transform function by the map $\pi_1 \circ \cdots \circ \pi_{j-1}$ is equal to y_j.*

With this choice we have relations of the form:

$$y_2 = 1 - u_2 + x_2 u_2 R_2(x_2, u_2) \text{ for some } R_2 \in \mathbf{R}\{x_2, u_2\}. \tag{12}$$

Notice that our choice of coordinates is done in such a way that the coefficient of $x_2^{m_2}$ in Formula (10) is -1 (see [11]). The result of substituting in $F^{(2)}(x_2, y_2)$, the term y_2 by using (12) is equal to $\bar{F}^{(2)}(x_2, u_2)$. By the implicit function theorem the term u_2 has an expansion as a series in $\mathbf{R}\{x_2, y_2\}$ with constant term equal to one. More generally notice that:

REMARK 6.5. – *By (12) at level $i \leq j$ the function $u_i \circ \pi_i \circ \cdots \circ \pi_{j-1}$ has an expansion as a series in $\mathbf{R}\{x_j, y_j\}$ with constant term equal to one.*

NOTATION 6.6. – *We introduce the following notations for $j = 1, \ldots, g$. See* Figure 4.

(i) *Let $\Gamma_j = [(m_j e_j, 0), (0, n_j e_j)]$ be the compact edge of the local Newton polygon of $F^{(j)}(x_j, y_j)$ (see (10) at level j).*

(ii) *Let Δ_j be the Newton diagram of $F^{(j)}(x_j, y_j)$. We denote by Δ_j^- the set $\Delta_j^- = \Delta_j \setminus \Gamma_j$.*

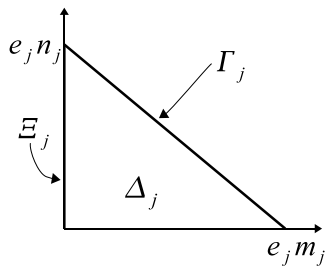

FIGURE 4.

(iv) *Let* $\omega_j : \Delta_j \cap \mathbf{Z}^2 \to \mathbf{Z}$ *be defined by* $\omega_j(r,s) = e_j(e_j n_j m_j - r n_j - s m_j)$.

PROPOSITION 6.7 (see [11]). – *We have*

$$\frac{1}{2}\mu(C)_0 = \sum_{j=1}^{g} \#(\mathrm{int}\Delta_j \cap \mathbf{Z}^2) + e_j - 1. \tag{13}$$

EXAMPLE 6.8. – *A local embedded resolution of the real plane branch singularity* $(C,0)$ *defined by* $F = (y_1^2 - x_1^3)^3 - x_1^{10} = 0$ *is as follows.*

The morphism π_1 of the toric resolution is defined by

$$\begin{aligned} x_1 &= u_2^1 x_2^2, \\ y_1 &= u_2^1 x_2^3. \end{aligned}$$

We have that $f_2 := y_1^2 - x_1^3$ is a 2nd-curvette for $(C,0)$ and x_1. We have $f_2 \circ \pi_1 = u_2^2 x_2^6 (1-u_2) = u_2^2 x_2^6 y_2$, where $y_2 := 1 - u_2$ defines the strict transform function of f_2, and together with x_2 defines local coordinates at the point of intersection o_2 with the exceptional divisor $\{x_2 = 0\}$. Notice in this case that the term R_2 in (12) is zero. For F we find that:

$$F \circ \pi_1 = u_2^6 x_2^{18} \left((1-u_2)^3 - u_2^4 x_2^2\right).$$

Hence $\mathrm{Exc}(F,\pi_1) := y_1^6 \circ \pi_1 = u_2^6 x_2^{18}$ is the exceptional function associated to F, and

$$F^{(2)} = y_2^3 - (1-y_2)^4 x_2^2$$

is the strict transform function. Comparing to (10) we see that $e_2 = 1$, $n_2 = 3$, $m_2 = 2$ and the restriction of $F^{(2)}(x_2,y_2)$ to the compact edge of its local Newton polygon is equal to $y_2^3 - x_2^2$. The map $\pi_2 : Z_3 \to Z_2$ is defined by $x_2 = u_3 x_3^3$ and $x_3 = u_3 x_3^2$. The composition $\pi_1 \circ \pi_2$ defines a local embedded resolution of $(C,0)$.

Local toric resolution of non-degenerate sqh-series

The construction of the local toric resolution indicated for the plane branch $(C,0)$ when $g = 1$ provides also the local toric resolution of a singular curve defined by a sqh-series, which is non-degenerate with respect to its local Newton polygon.

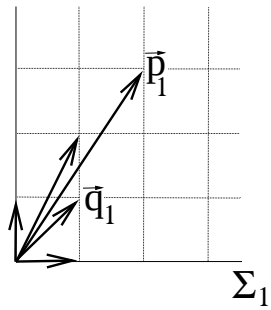

FIGURE 5. The subdivision Σ_1 associated to F in Example 6.8

LEMMA 6.9. – *Let $P \in \mathbf{R}\{x, y\}$ be a sqh-series of the form (3) defining a plane curve germ $(D, 0)$. If P is non-degenerate with respect to its local Newton polygon then the monomial map $\pi_1 : \mathbf{C}^2 \to \mathbf{C}^2$ defined by (8) for $(x, y) = (x_1, y_1)$ is a local embedded resolution of $(D, 0)$. Moreover, we have that:*

(i) *The strict transform $D^{(2)}$ of D does not cut the line $\{u_2 = 0\}$.*
(ii) *The intersection of $D^{(2)}$ with the line $\{x_2 = 0\}$ is transversal and consists of the e points with coordinates $u_2 = \theta_s^{-1}$ for $s = 1, \ldots, e$, where θ_s denote the peripheral roots of P along the compact edge of its local Newton polygon.*

Proof. – It is easy to see that $P \circ \pi_1 = x_2^{en_1m_1} u_2^{en_1d_1} (\prod_{s=1}^{e}(1 - \theta_s u_2) + \cdots)$, where the terms which are not written are divisible by x_2u_2. The term $x_2^{en_1m_1} u_2^{en_1d_1}$ defines the exceptional divisor $\mathrm{Exc}(P, \pi_1)$, while the other term which we denote by $\bar{P}^{(2)}(x_2, u_2)$, defines the strict transform $D^{(2)}$ of D. The assertion (i) follows since $\bar{P}^{(2)}(x_2, 0) = 1$. The intersection $D^{(2)} \cap \{x_2 = 0\}$ is defined by $\bar{P}^{(2)}(0, u_2) = 0$. Since this polynomial equation has simple solutions $u_2 = \theta_s^{-1}$, for $s = 1, \ldots, e$, the intersection of $D^{(2)}$ and $\{x_2 = 0\}$ is transversal. □

DEFINITION 6.10. – *With the hypotheses and notation of Lemma 6.9, the curve $D^{(2)}$ is in* maximal position *with respect to the line $\{x_2 = 0\}$ if there is only one component of $\mathbf{R}D^{(2)}$ which contains the points of intersection of $D^{(2)}$ with $\{x_2 = 0\}$.*

REMARK 6.11. – *By Lemma 6.9 if $D^{(2)}$ is in maximal position with respect to the line $\{x_2 = 0\}$ then all the peripheral roots of P along the compact edge of its local Newton polygon are real and of the same sign, since $D^{(2)} \cap \{u_2 = 0\} = \varnothing$.*

7. A set of polynomials defined from the embedded resolution

We associate in this section some monomials in the semi-roots to the elements in $\Delta_j^- \cap \mathbf{Z}^2$. From these monomials we define a class of deformations which we will study in the following sections.

To avoid cumbersome notations if $1 \leq i < j \leq g$ we denote by u_i the term $u_i \circ \pi_i \circ \cdots \circ \pi_{j-1}$ if the meaning is clear from the context.

LEMMA 7.1 (see [11]). – *Let us fix a real plane branch $(C,0)$ together with a local toric embedded resolution $\pi_1\circ\cdots\circ\pi_g$ (cf. notations of Section 6). If $2\le j\le g$ and $(r,s)\in\mathbf{Z}^2_{\ge 0}$ with $s<e_{j-1}$ then there exist unique integers*

$$0<i_0,\quad 0\le i_1<n_1,\quad \dots,\quad 0\le i_{j-1}<n_{j-1},\quad i_j=s, \tag{14}$$

and $k_2,\dots k_j>0$ such that the following holds

$$(x_1^{i_0}f_1^{i_1}f_2^{i_2}\cdots f_j^{i_j})\circ\pi_1\circ\cdots\circ\pi_{j-1}=\mathrm{Exc}(F,\pi_1\circ\cdots\circ\pi_{j-1})\,u_2^{k_2}\cdots u_j^{k_j}\,x_j^r\,y_j^s. \tag{15}$$

By Remark 6.5 and (11) the term introduced by (15) is equal to the product of a monomial in (x_j,y_j) times a unit in $\mathbf{R}\{x_j,y_j\}$ with constant term equal to one.

EXAMPLE 7.2. – *If $j=2$ we have that the integers mentioned in Lemma 7.1 in terms of a suitable pair (r,s) are*

$$k_2=e_1-s+[c_1r/n_1],\quad i_0=k_2m_1-rd_1,\quad i_1=c_1r-n_1[c_1r/n_1]\quad \text{and}\quad i_2=s, \tag{16}$$

where the c_1, d_1, n_1 and m_1 are the integers defined by (7) and $[a]:=\min\{k\in\mathbf{Z}\mid k\le a\}$ denotes the integer part of $a\in\mathbf{Q}$. Notice that by (11) and (8) we have that $\mathrm{Exc}(F,\pi_1)=y_1^{e_0}\circ\pi_1=u_2^{e_0d_1}x_2^{e_0m_1}$.

In general, the integers (14) are determined inductively in a similar way from the pairs $\{(n_j,m_j)\}_{j=1}^g$.

DEFINITION 7.3. – *If $2\le j\le g$, $(r,s)\in\mathbf{Z}^2_{\ge 0}$ and $s<e_{j-1}$ we use the following notation:*

$$M_j(r,s):=x_1^{i_0}f_1^{i_1}f_2^{i_2}\cdots f_j^{i_j},$$

where the exponents $i_0,i_i,\dots,i_j$ are those of (14). We also use the notation $M_1(r,s)$ for $x_1^ry_1^s$ (recall that $y_1=f_1$).

REMARK 7.4. – *Notice that using (8) at level $1\le j\le g$ we can express $x_j^ry_j^s\mathrm{Exc}(F,\pi_1\circ\cdots\circ\pi_{j-1})$ as the composition $G_j(r,s)\circ\pi_1\circ\cdots\circ\pi_{j-1}$ where $G_j(r,s)$ is a* meromorphic *function in x_1,y_1 (see* Example 7.5 *below). Lemma 7.1 guarantees that we can choose a* holomorphic function *$M_j(r,s)$ instead, up to replacing the term $x_j^ry_j^s\mathrm{Exc}(F,\pi_1\circ\cdots\circ\pi_{j-1})$ by the product of it by a suitable unit in $\mathbf{R}\{x_j,y_j\}$.*

EXAMPLE 7.5. – *We continue with the singularity of Example 6.8. The following table indicates the terms $M_2(r,s)$ for $(r,s)\in\Delta_2$ corresponding to Example 6.8.*

(r,s)	$(0,0)$	$(0,1)$	$(0,2)$	$(1,1)$	$(1,0)$
$M_2(r,s)$	x_1^9	$x_1^6f_2$	$x_1^3f_2^2$	$x_1^5y_1f_2$	$x_1^8y_1$

For instance, we have that $M_2(1,1)=x_1^5y_1f_2$, since $x_1^5y_1f_2\circ\pi_1=\mathrm{Exc}(F^{(1)},\pi_1)u_2^2x_2y_2$, where $\mathrm{Exc}(F^{(1)},\pi_1)=u_2^6x_2^{18}$ by Example 6.8. Notice also that the analytic function $x_2y_2\mathrm{Exc}(F,\pi_1)$ on Z_2 is equal to $(x_1^{-1}y_1^5f_2)\circ\pi_1$, *i.e.*, it is the transform by π_1 of a *meromorphic* function.

Remark that both of the following formulas

$$y_1^6\circ\pi_1=\mathrm{Exc}(F^{(1)},\pi_1)\text{ and }x_1^9\circ\pi_1=\mathrm{Exc}(F^{(1)},\pi_1)u_2^3$$

seem to correspond to (15) in the case $(r,s) = (0,0)$, however the term y_1^6 is not of the form prescribed by the inequalities (14), hence the first formula is not the one considered by Lemma 7.1.

8. Patchworking sqh-smoothings from the toric resolution

In this section we consider a plane curve singularity $(C,0)$, defined by a sqh series non-degenerate with respect to its local Newton polygon. We assume that $(C,0)$ is not analytically irreducible. We assume that the curve C is defined in a closed ball B' centered at 0, such that $C \setminus \{0\}$ is smooth in B'. Let B be a Milnor ball for $(C,0)$, contained in the interior of B', and C_t $(0 < t \ll 1)$ a smoothing of $C = C_0$ defined in B'. We will focus on the existence of closed components of C_t which intersect the boundary of the Milnor ball B, for $0 < t \ll 1$. By Viro's Theorem we have that on the closure of the set $B' \setminus B$ the curves $\mathbf{R}C_t$ are isotopic to each other for $0 \leq t \ll 1$ (even for $t = 0$), see [37, 38] for instance. Notice that with the terminology of Section 5 the intersection of such a component with the interior of $\mathbf{R}B$ is a non-compact component of the smoothing.

Lemma 8.1. – *Let $P = \sum a_{ij}(t)x^iy^j \in \mathbf{R}\{x,y\}[t]$, of the form indicated in Notation 5.7, define a sqh-smoothing C_t. We assume the following statements (cf. Definition 6.10):*

(i) *The strict transform $C_0^{(2)}$ of $(C_0,0)$ by the map π_1 (given by (8) for $(x,y) = (x_1,y_1)$) is in maximal position with respect to the line $\{x_2 = 0\}$.*

(ii) *The curve $\tilde{C}$ defined by $\{P_1^{\hat{\Delta}} = 0\}$ on the toric surface $Z(\Delta)$ is in maximal position with respect to the line $Z(\Gamma)$ (see Figure 6 left).*

(iii) *The order of the peripheral roots $\{\theta_s\}_{s=1}^e$ when viewed in the connected component of $\mathbf{R}\tilde{C}$ which meets $Z(\Gamma)$ coincides with the order of the points $\{(0,\theta_s^{-1})\}_{s=1}^e$ of the intersection $C_0^{(2)} \cap \{x_2 = 0\}$ when viewed in the connected component $\mathbf{R}C_0^{(2)}$ which contains all of them.*

If the component $\mathbf{R}C_0^{(2)}$ which contains $C_0^{(2)} \cap \{x_2 = 0\}$ is non-compact (resp. is closed) then exactly one of the following two statements holds for the set of components $\mathcal{C}_t$ of $\mathbf{R}C_t$ which intersect the boundary of B, for $0 < t \ll 1$ (see Figure 7).

(a) *There are exactly $e-1$ closed components and one non-compact component in $\mathcal{C}_t$ (resp. there are e closed components).*

(b) *There are exactly two components in $\mathcal{C}_t$, one of them closed and the other non-compact (resp. both of them are closed components).*

In addition, if (a) *does not hold then* (a) *holds for the sqh-smoothing C'_t defined by $P' = \sum_{(i,j)\in\Delta\cap\mathbf{Z}^2} (-1)^{n_1i+m_1j+n_1m_1e}\, a_{ij}(t)\, x^iy^j + \sum_{n_1i+m_1j>n_1m_1e_1} a_{ij}(t)\, x^iy^j$.*

Proof. – Notice that by hypothesis (i) the peripheral roots θ_s are of the same sign, say > 0 (see Remark 6.11). We analyze first the case of a non-compact component of $\mathbf{R}C_0^{(2)}$ intersecting $\{x_2 = 0\}$ (see Figure 6).

Each peripheral root θ_s for $s = 1,\dots,e$ corresponds to a branch $(C_{0,s},0)$ of $(C_0,0)$ defined by a factor of P_0 of the form $y^{n_1} - \theta_s x^{m_1} + \cdots$ (where the other terms have exponents (i,j) such that $n_1i + m_1j > n_1m_1$). The strict transform $C_{0,s}^{(2)}$ of $C_{0,s}$ by π_1 intersects the line $\{x_2 = 0\}$ at the point with coordinate $u_2 = \theta_s^{-1}$ (see Lemma 6.9).

We label the peripheral roots $\{\theta_s\}_{s=1}^e$ with the order given by the position of the points $\{(0,\theta_s^{-1})\}_{s=1}^e$ in the connected component of $\mathbf{R}C_0^{(2)}$ which intersects the line $\{x_2=0\}$. This component is contained in the set $\{u_2>0\}$ by Lemma 6.9.

Notice that the map π_1 sends the set $\{x_2>0,u_2>0\}$ (resp. $\{x_2<0,u_2>0\}$) to $\mathbf{R}^2_{>0}$ (resp. $\rho_\Gamma(\mathbf{R}^2_{\geq 0})$, where $\rho_\Gamma=\rho_{n_1,m_1}$ (cf. Notation 2.1)). It follows that we have $2e$ points in $\mathbf{R}C_0\cap\mathbf{R}\partial B$, of which e of them are in the quadrant $\mathbf{R}^2_{>0}$ while the others belong to $\rho_\Gamma(\mathbf{R}^2_{>0})$. We denote by θ_s^+ (resp. θ_s^-) the point in the intersection $\mathbf{R}^2_{\geq 0}\cap C_{0,s}\cap\partial\mathbf{R}B$ (resp. in $\rho_\Gamma(\mathbf{R}^2_{>0})\cap C_{0,s}\cap\partial\mathbf{R}B$), for $s=1,\dots,e$. By continuity of the smoothing we can label the points of $\mathbf{R}C_t\cap\partial\mathbf{R}B$ by $\{\theta_s^+(t),\theta_s^-(t)\}_{s=1}^e$, where $\theta_s^\pm(t)$ is a continuous function in t and $\theta_s^\pm(0)=\theta_s^\pm$.

The curves $\mathbf{R}C_t$ and $\mathbf{R}C_0$ are isotopic in the closure of $\mathbf{R}B'\setminus\mathbf{R}B$ hence we deduce that the points $\theta_s^+(t)$ and $\theta_{s+1}^+(t)$ (resp. $\theta_s^-(t)$ and $\theta_{s+1}^-(t)$) are bounded by an arc of $\mathbf{R}C_t\setminus\mathbf{R}B$, for $0\leq t\ll 1$ if and only if the points $(0,\theta_s^{-1})$ and $(0,\theta_{s+1}^{-1})$ are bounded by an arc of $\mathbf{R}C_0^{(2)}$ which is contained in $\{x_2>0,u_2>0\}$ (resp. in $\{x_2<0,u_2>0\}$).

Now we discuss the geometry of the components of $\mathbf{R}C_t\cap\mathbf{R}B$ which intersect the boundary of B. By Theorem 5.1 and the hypothesis (iii) we have that if $1\leq s\leq e-1$ the points $\theta_s^+(t)$ and $\theta_{s+1}^+(t)$ (resp. $\theta_s^-(t)$ and $\theta_{s+1}^-(t)$) are joined by an arc if and only if the peripheral roots θ_s and θ_{s+1}, identified with the zeros of P_0^Γ in $Z(\Gamma)$, are joined by an arc of $\mathbf{R}^2_{>0}\cap\mathbf{R}\tilde{C}$ (resp. of $\rho_\Gamma(\mathbf{R}^2_{>0})\cap\mathbf{R}\tilde{C}$).

Suppose without loss of generality that $\theta_1^+(t)$ and $\theta_2^+(t)$ are joined by an arc of $\mathbf{R}C_t\setminus\mathbf{R}B$. By the hypothesis (iii) we have that if $\theta_1^+(t)$ and $\theta_2^+(t)$ are joined by an arc of $\mathbf{R}B\cap\mathbf{R}C_t$ then statement (a) holds; otherwise $\theta_1^-(t)$ and $\theta_2^-(t)$ are joined by an arc of $\mathbf{R}B\cap\mathbf{R}C_t$ and then (b) holds. See Figure 7.

The case of a closed component of $\mathbf{R}C_0^{(2)}$ intersecting the line $\{x_2=0\}$ follows with the same discussion.

Finally suppose that (a) does not hold. Then, we have that $P_0'=P_0$ by definition of P', hence P' defines a sqh-smoothing of $(C_0,0)$. Notice that P' verifies statement (a) by Remark 4.9 and Theorem 5.1. □

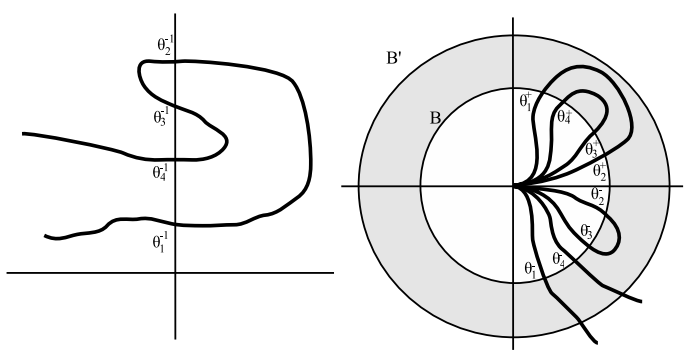

FIGURE 6.

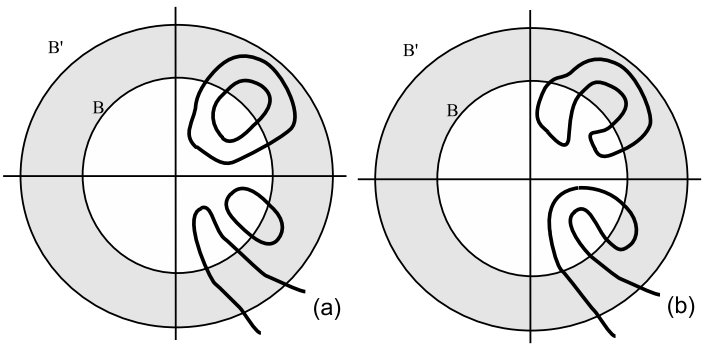

FIGURE 7. In this figure $\rho_\Gamma = \rho_{2,3}$

REMARK 8.2. – *If $C_0^{(2)}$ has good oscillation with respect to $\{x_2 = 0\}$ then we can always guarantee the existence of a smoothing C_t verifying the statement (a) in Lemma 8.1. We can define it by Propositions 4.8 and 5.8. See Figures 8 and 9.*

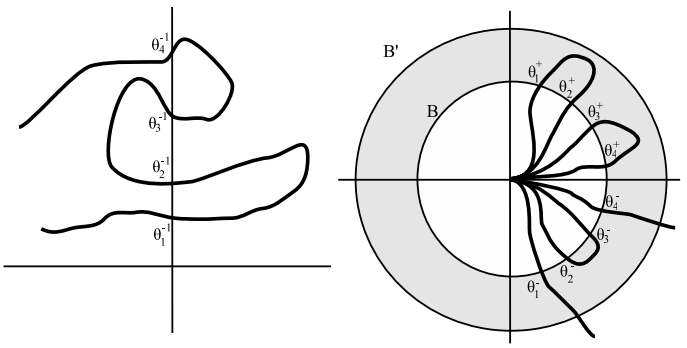

FIGURE 8.

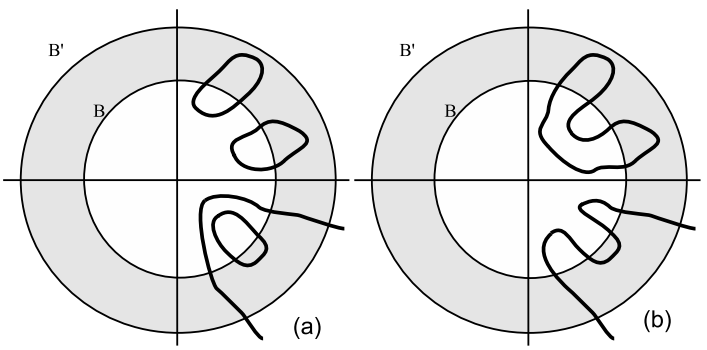

FIGURE 9. In this figure $\rho_\Gamma = \rho_{2,3}$

The following terminology is introduced, with a slightly different meaning in [19]:

DEFINITION 8.3. – *Let $P \in \mathbf{R}\{x,y\}[t]$ of the form indicated in Notation 5.4 define an sqh-smoothing of $C_0 := \{P_0 = 0\}$. We say that $P_1^{\hat{\Delta}}$ and P_0 have* regular intersection *along Γ if the statement* (a) *of* Lemma 8.1 *holds. In addition if the component of $\mathbf{R}C_0^{(2)}$ which meets $\{x_2 = 0\}$ is closed (resp. non-compact) we say that $P_1^{\hat{\Delta}}$ and P_0 have* closed *(resp.* non-compact*) regular intersection along Γ.*

REMARK 8.4. – *The case of closed regular intersection along Γ in Definition 8.3 may only happen in the case e even.*

LEMMA 8.5. – *Let $P_0 \in \mathbf{R}\{x,y\}$ be of the form (3) such that the peripheral roots of P_0^{Γ} are all real and of the same sign. Let $P, Q \in \mathbf{R}\{x,y\}[t]$ with $P_0 = Q_0$ define Harnack sqh-smoothings of the germ $\{P_0 = 0\}$ such that $P_1^{\hat{\Delta}}$ (resp. $Q_1^{\hat{\Delta}}$) and P_0 have regular intersection along Γ. Then the curves $\{P_1^{\hat{\Delta}} = 0\}$ and $\{Q_1^{\hat{\Delta}} = 0\}$ on $Z(\Delta_1)$ have the same signed topological type.*

Proof. – By Theorem 5.2 the polynomials $P_1^{\hat{\Delta}} = 0$ and $Q_1^{\hat{\Delta}} = 0$ on $Z(\Delta_1)$ define Harnack curves in $Z(\Delta)$ which intersect $Z(\Gamma)$ in the same set. By Proposition 5.11 there are two possible signed topological types of Harnack curves in $Z(\Delta)$ with prescribed peripheral roots in $Z(\Gamma)$. By Lemma 8.1 only one of these types provides regular intersection along Γ. □

9. Multi-semi-quasi-homogeneous smoothings of a real plane branch

In this section we introduce a class of deformations of a plane branch $(C,0)$, called multi-semi-quasi-homogeneous (msqh) deformations and we describe their basic properties.

Definition and basic properties of msqh-deformations

Let $(C,0)$ be a real plane branch. We keep the notation of Section 6. The following algebraic expressions, given in terms of the *monomials* introduced in Definition 7.3, define a sequence of deformations of the real branch $(C,0)$ defined by $F(x_1,y_1) = 0$. Recall that we denote by $M_1(r,s)$ the monomial $x_1^r y_1^s$. The term $\underline{t}_j$ denotes $(t_j,\dots,t_g)$ for any $1 \le j \le g$. We consider multiparametric deformations of the form:

$$
(17)\qquad \begin{cases} P_{\underline{t}_g} := F + \displaystyle\sum_{(r,s)\in\Delta_g^- \cap \mathbf{Z}^2} a_{r,s}^{(g)}(t_g)\, M_g(r,s) \\ \dots \quad \dots \quad \dots \quad \dots \qquad \dots \qquad \dots \\ P_{\underline{t}_1} := P_{\underline{t}_2} + \displaystyle\sum_{(r,s)\in\Delta_1^- \cap \mathbf{Z}^2} a_{r,s}^{(1)}(t_1)\, M_1(r,s), \end{cases}
$$

where $a_{r,s}^{(j)}(t_j) \in \mathbf{R}[t_j]$ for $(r,s) \in \Delta_j^- \cap \mathbf{Z}^2$ and $j = 1,\dots,g$. Notice that this class of deformations generalizes the *real Milnor fiber* by setting $a_{0,0}^{(1)} := t_1$ and $a_{r,s}^{(j)} = 0$ for all $(j,r,s) \neq (1,0,0)$. Notice that $P_{\underline{t}_1}$ determines any of the terms $P_{\underline{t}_j}$ for $1 < j \le g$, by substituting $t_1 = \dots = t_{j-1} = 0$ in $P_{\underline{t}_1}$.

DEFINITION 9.1

(i) *We say that the* multiparametric deformation $C_{\underline{t}_1}$, *defined by* $P_{\underline{t}_1} = 0$ *for* $P_{\underline{t}_1}$ *of the form (17), is a* multiparametric smoothing *of* $(C, 0)$ *if the curve* $C_{\underline{t}_1}$ *is smooth and transversal to the boundary of a Milnor ball* $B(C, 0)$ *of* $(C, 0)$ *for* $0 < t_1 \ll \cdots \ll t_g \ll 1$.

(ii) *The multiparametric deformation* $C_{\underline{t}_1}$ *is* multi-semi-quasi-homogeneous *(msqh) if*

$$a_{r,s}^{(j)} = A_{r,s}^{(j)} t_j^{\omega_j(r,s)}, \text{ for } 1 \leq j \leq g, \text{ and } (r, s) \in \Delta_j^- \cap \mathbf{Z}^2,$$

where $\omega_j(r, s) \in \mathbf{Z}_{\geq 0}$ *is defined in Notation 6.6,* $A_{r,s}^{(j)} \in \mathbf{R}$ *and* $A_{0,0}^{(j)} \neq 0$, *for* $j = 1, \ldots, g$. *If in addition,* $C_{\underline{t}_1}$ *is a multiparametric smoothing we say that* $C_{\underline{t}_1}$ *is an* msqh-smoothing.

Roughly speaking, the geometric idea behind the definition of msqh-deformations is that the deformation $C_{\underline{t}_l}$ of $(C, 0)$ is built from a sequence of sqh-deformations of $C^{(j)} \subset Z_j$ for $l \leq j \leq g$ and for $1 \leq l \leq g$. We focus on the class of msqh-deformations since this allows us to analyze the asymptotic scale or size of ovals in the deformation $C_{\underline{t}_1}$ for $0 < t_1 \ll \cdots \ll t_g \ll 1$ (see Section 10).

NOTATION 9.2

(i) *We denote by* $C_{\underline{t}_l}$, *or by* $C_{\underline{t}_l}^{(1)}$, *the deformation of* $(C, 0)$ *defined by* $P_{\underline{t}_l}$ *in a Milnor ball of* $(C, 0)$, *for* $0 < t_l \ll \cdots \ll t_g \ll 1$ *and* $l = 1, \ldots, g$.

(ii) *We denote by* $C_{\underline{t}_l}^{(j)} \subset Z_j$ *the strict transform of* $C_{\underline{t}_l}$ *by the composition of toric maps* $\pi_1 \circ \cdots \circ \pi_{j-1}$ *and by* $P_{\underline{t}_l}^{(j)}(x_j, y_j)$ *the function defining* $C_{\underline{t}_l}^{(j)}$ *in the coordinates* (x_j, y_j), *for* $2 \leq j \leq l \leq g$.

These notations are analogous to those used for C in Section 6.

PROPOSITION 9.3 (see [11]). – *If* $1 \leq j < l \leq g$ *then we have that:*

(i) *The local Newton polygon of* $P_{\underline{t}_l}^{(j)}(x_j, y_j)$ *and of* $F^{(j)}(x_j, y_j)$ *coincide. Moreover, if* $j + 1 < l$ *the symbolic restrictions to the edge* Γ_j *of the series* $P_{\underline{t}_l}^{(j)}(x_j, y_j)$ *and* $F^{(j)}(x_j, y_j)$ *coincide.*

(ii) *The peripheral roots of* $P_{\underline{t}_{j+1}}^{(j)}(x_j, y_j)$ *along the edge* Γ_j *are of the form* $\{1 + \gamma_s^{(j)} t_{j+1}^{e_{j+1} m_{j+1}}\}_{s=1}^{e_j}$, *where* $\gamma_s^{(j)} \in \mathbf{C}^*$ *and* $s = 1, \ldots, e_j$ *(see Notation 6.6).*

(iii) *The points of intersection of* $\{x_{j+1} = 0\}$ *with* $C_{\underline{t}_{j+1}}^{(j+1)}$ *is defined by points with coordinates:*

$$u_{j+1} = (1 + \gamma_s^{(j)} t_{j+1}^{e_{j+1} m_{j+1}})^{-1}, \text{ for } s = 1, \ldots, e_j. \tag{18}$$

EXAMPLE 9.4. – *We continue with the curve analyzed in Examples 6.8 and 7.5. The following deformation* $P_{t_2} = f - 6t_2^2 x_1^3 f_2 + 11 t_2^3 x_1 f_2 + 6 t_2 x_1^9 - t_2 x_1^5 y_1 f_2 + t_2^3 x_1^8 y_1 f_2$, *where* $f_2 = y_1^2 - x_1^3$, *is among the class introduced by (17). It verifies the assertions indicated in Proposition 9.3.*

REMARK 9.5. – *We deduce the following assertions from Proposition 9.3.*

(i) *If* $1 \leq j < l \leq g$ *the curves* $C_{\underline{t}_l}^{(j)}$ *and* $C^{(j)}$ *meet the exceptional divisor of* $\pi_1 \circ \cdots \circ \pi_{j-1}$ *only at the point* $o_j \in \{x_j = 0\}$ *and with the same intersection multiplicity* e_{j-1}.

(ii) *If* $1 < j \leq g$ *the curves* $C_{\underline{t}_j}^{(j)}$ *meet the exceptional divisor of* $\pi_1 \circ \cdots \circ \pi_{j-1}$ *only at* e_j *points of* $\{x_j = 0\}$, *counted with multiplicity.*

REMARK 9.6. – *It follows also from Proposition 9.3 that those peripheral roots of* $P^{(j)}_{\underline{t}_{j+1}}(x_j, y_j)$*, which are real, are also positive for* $0 < t_{j+1} \ll 1$.

When we say that $C^{(j)}_{\underline{t}_l}$ defines a *deformation with parameter* t_l, we mean for $t_{l+1}, \dots t_g$ fixed. Proposition 9.7 motivates our choice of terminology in this section.

PROPOSITION 9.7. – $C^{(j)}_{\underline{t}_j}$ *is an sqh-deformation with parameter* t_j *of the singularity* $(C^{(j)}_{\underline{t}_{j+1}}, o_j)$ *for* $1 \leq j \leq g$.

Proof. – By Proposition 9.3 the curves $C^{(j)}_{\underline{t}_{j+1}}$ and $C^{(j)}_{\underline{t}_j}$ intersect only the irreducible component $\{x_j = 0\}$ of the exceptional divisor of $\pi_1 \circ \cdots \circ \pi_{j-1}$. By the definition, by Formula (17) and Lemma 7.1, if $C^{(j)}_{\underline{t}_{j+1}}$ is defined on Z_j by $P^{(j)}_{\underline{t}_{j+1}}(x_j, y_j) = 0$ then $C^{(j)}_{\underline{t}_j}$ is defined by the vanishing of:

$$P^{(j)}_{\underline{t}_j}(x_j, y_j) = \sum_{(r,s) \in \Delta_j^- \cap \mathbf{Z}^2} A^{(j)}_{r,s}\, t_j^{\omega_j(r,s)} \underline{u}^{\underline{k}(r,s)}\, x_j^r\, y_j^s + P^{(j)}_{\underline{t}_{j+1}}(x_j, y_j), \tag{19}$$

where for each (r, s) the term $\underline{u}^{\underline{k}(r,s)}$ denotes the term $u_2^{k_2} \cdots u_j^{k_j}$ of (15).

The elements $u_2, \dots, u_j$, expanded in terms of x_j, y_j, have constant term equal to one by Remark 6.5. It follows from this that the local Newton polyhedron of $P^{(j)}_{\underline{t}_j}(x_j, y_j)$ with respect to x_j, y_j and t_j, has only one compact face of dimension two, which is equal to the graph of ω_j on the Newton diagram Δ_j (cf. Notation 6.6). □

It follows from Proposition 9.7 that

$$(P^{(j)}_{\underline{t}_j})^{\hat{\Delta}_j}_{t_j=1} = \sum_{(r,s) \in \Delta_j^- \cap \mathbf{Z}^2} A^{(j)}_{r,s}\, x_j^r\, y_j^s + (P^{(j)}_{\underline{t}_{j+1}})^{\Gamma_j}, \tag{20}$$

where $(P^{(j)}_{\underline{t}_{j+1}})^{\Gamma_j}$ is described by Proposition 9.3.

DEFINITION 9.8. – *The msqh-deformation* $C_{\underline{t}_1}$ *is* real non-degenerate *if the polynomials* $(P^{(j)}_{\underline{t}_j})^{\hat{\Delta}_j}_{t_j=1}$ *in (20) are real non-degenerate with respect to the polygon* Δ_j*, for* $j = 1, \dots, g$ *(see Notations 3.2).*

PROPOSITION 9.9. – *If the msqh-deformation* $C_{\underline{t}_1}$ *is real non-degenerate then* $C^{(j)}_{\underline{t}_j}$ *is an msqh-smoothing of the singularity* $(C^{(j)}, o_j)$*, for* $j = 1, \dots, g$*. In particular,* $C_{\underline{t}_1}$ *is an msqh-smoothing of* $(C, 0)$.

Proof. – We prove the proposition by induction on g. If $g = 1$ then the assertion is a consequence of Definition 5.6. Suppose $g > 1$, then by the induction hypothesis $C^{(2)}_{\underline{t}_2}$ is an msqh-smoothing of $(C^{(2)}, o_2)$. By Proposition 9.3 the term $P_{\underline{t}_2}(x, y)$, defining the curve $C_{\underline{t}_2}$, is non-degenerate with respect to its local Newton polygon. By hypothesis the deformation $C_{\underline{t}_1}$ is an sqh-smoothing of $(C_{\underline{t}_2}, 0)$ with parameter t_1. It follows that $C_{\underline{t}_1}$ defines then an msqh-smoothing of $(C, 0)$ for $0 < t_1 \ll \cdots \ll t_g \ll 1$. □

To simplify notations in the following definition we have denoted the ovals without indicating the dependency with the parameters.

DEFINITION 9.10. – *Let $C_{\underline{t}_1}$ be a real non-degenerate msqh-smoothing of $(C,0)$. Denote by B (resp $B_2 \subset B$) a Milnor ball for the singularity $(C,0)$ (resp. for $(C_{\underline{t}_2},0)$). Notice that the radius of B_2 depends on the parameters $\underline{t}_2$.*

(i) *An oval of $C_{\underline{t}_1}$ which is contained in the interior of B_2 for $0 < t_1 \ll \cdots \ll t_g \ll 1$ (resp. which intersects the boundary of B_2) is said to be an oval of* depth one *(resp. of* mixed depth one*).*

(ii) *For $2 \leq j \leq g$ we say that an oval O of $C_{\underline{t}_1}$ is of* depth j *(resp. an oval of* mixed depth j*) if there exists an oval O_j of depth 1 (resp. an oval of mixed depth 1) of the msqh-smoothing $C^{(j)}_{\underline{t}_j}$ of $(C^{(j)}, o_j)$ such that $\{x_j = 0\} \cap O_j = \varnothing$ and that O arises as a slight perturbation of the oval $\pi_1 \circ \cdots \circ \pi_{j-1}(O_j)$ of $C_{\underline{t}_j}$ for $0 < t_1 \ll \cdots \ll t_g \ll 1$.*

REMARK 9.11. – *When we say that an oval O of depth (resp. mixed depth) $j \geq 2$ arises as a slight perturbation of the oval $\pi_1 \circ \cdots \circ \pi_{j-1}(O_j)$ of $C_{\underline{t}_j}$ we mean precisely that there exist ovals O_l of $C^{(l)}_{\underline{t}_l}$ with $O_1 = O$ such that O_l is isotopic to $\pi_l(O_{l-1})$, outside a Milnor ball of $(C_{\underline{t}_{l+1}}, o_l)$, for $l = 1, \ldots, j-1$ and $0 < t_1 \ll \cdots \ll t_g \ll 1$.*

In Figure 10 we represent an oval of mixed depth one; the ball B_2 is a Milnor ball for $(C_{\underline{t}_2}, 0)$, the segment of the oval in the small ball B_2 corresponds to an arc of the chart of $P^{\hat{\Delta}_1}_{t_1=1}$ while the segment of the oval in $B \setminus B_2$ is isotopic on this set to an arc of $\pi_1(\mathbf{R}C^{(2)}_{\underline{t}_2})$.

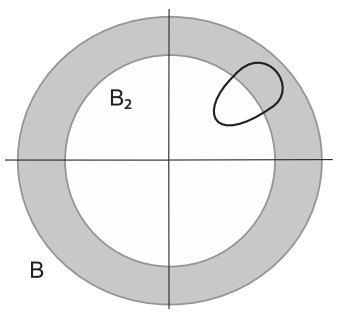

FIGURE 10. An oval of mixed depth equal to one

PROPOSITION 9.12. – *Let $C_{\underline{t}_1}$ be a real non-degenerate msqh-smoothing. If $(P_{\underline{t}_1})^{\hat{\Delta}_1}$ and $P_{\underline{t}_2}$ have non-compact (resp. closed) regular intersection along Γ_1 (see Definition 8.3) then for $0 < t_1 \ll \cdots \ll t_g \ll 1$ there are exactly $e_1 - 1$ ovals of mixed depth one and one non-compact component (resp. e ovals of mixed depth one) of $\mathbf{R}C_{\underline{t}_1}$ which intersect the boundary of a Milnor ball of the singularity $(C_{\underline{t}_2}, 0)$.*

Proof. – The assertion is a consequence of Definition 8.3 and Lemma 8.1. □

The following remark is immediate from Definition 9.10:

REMARK 9.13. – *If $C_{\underline{t}_1}$ is an msqh-smoothing of the real plane branch $(C,0)$ then any pair of ovals of depth j, j' with $j < j'$ is not nested. An msqh-smoothing of a real plane branch may have nested ovals (see Example 11.2).*

Maximal, Harnack and multi-Harnack smoothings

We introduce the following definitions for a real non-degenerate msqh-smoothing $C_{\underline{t}_1}$ of a real plane branch $(C,0)$ (cf. Definition 9.8 and Section 6 for notations).

DEFINITION 9.14. – *Let $C_{\underline{t}_1}$ be a real non-degenerate msqh-smoothing of a real plane branch $(C,0)$.*

(i) *$C_{\underline{t}_1}$ is an M-msqh-smoothing if the number of ovals in a Milnor ball of $(C,0)$ is equal to $\frac{1}{2}\mu(C)_0$.*

(ii) *A M-msqh-smoothing $C_{\underline{t}_1}$ is* Harnack *if it is in maximal position with good oscillation with respect to the coordinate axes defined by the coordinates (x_1,y_1) and if the connected component of the smoothing which intersects the coordinate axes is non-compact.*

(iii) *A M-msqh-smoothing $C_{\underline{t}_1}$ is* multi-Harnack *if $C^{(j)}_{\underline{t}_j}$ is a Harnack M-msqh-smoothing of $(C^{(j)},o_j)$, with respect to the coordinate axes defined by (x_j,y_j) for $1\leq j\leq g$.*

The following result describes inductively M-msqh-smoothings of a plane branch $(C,0)$.

THEOREM 9.1. – *Let $C_{\underline{t}_1}$ be a real non-degenerate msqh-smoothing of the real plane branch $(C,0)$. We introduce the following conditions:*

(i) *$C^{(2)}_{\underline{t}_2}$ is a M-msqh-smoothing of $(C^{(2)},o_2)$ in maximal position with respect to $\{x_2=0\}$.*

(ii) *$C_{\underline{t}_1}$ defines a M-sqh-smoothing of the singularity $(C_{\underline{t}_2},0)$ with parameter t_1.*

(iii) *$P^{\hat{\Delta}_1}_{t_1=1}$ and $P_{\underline{t}_2}$ have regular intersection along Γ_1 (see Definition 8.3).*

The deformation $C_{\underline{t}_1}$ is a M-msqh-smoothing of $(C,0)$ if and only if conditions (i), (ii) *and* (iii) *hold.*

Proof. – We prove first that if conditions (i) and (ii) hold then $C_{\underline{t}_1}$ is a M-msqh-smoothing of $(C,0)$. The number of ovals of the msqh-smoothing $C^{(2)}_{\underline{t}_2}$ is equal to

$$\frac{1}{2}\mu(C^{(2)})_{o_2} \overset{(13)}{=} \sum_{j=2}^{g}\left(\#(\mathrm{int}\Delta_j\cap\mathbf{Z}^2)+e_j-1\right). \tag{21}$$

Since $C^{(2)}_{\underline{t}_2}$ is in maximal position with respect to $\{x_2=0\}$ there is only one connected component A of the smoothing $C^{(2)}_{\underline{t}_2}$ which intersects $\{x_2=0\}$ in e_1 different real points. By Proposition 9.3 the curve $C_{\underline{t}_2}=\pi_1(C^{(2)}_{\underline{t}_2})$, defined by $P_{\underline{t}_2}(x_1,y_1)=0$, is real non-degenerate with respect to its local Newton polygon. The set $A' := \pi_1(A)$ is the only connected component of $\mathbf{R}C_{\underline{t}_2}$ which passes through the origin. By hypothesis (ii) we have that $C_{\underline{t}_1}$ is an M-sqh-smoothing of $C_{\underline{t}_2}$ with parameter t_1. This yields $\#(\mathrm{int}\Delta_1\cap\mathbf{Z}^2)$ ovals of depth 1 (see Formula (4)). By hypothesis (iii) and Proposition 9.12 if A is a closed (resp. non-compact) component there are exactly e_1 ovals of mixed depth 1 (resp. e_1-1 ovals of mixed depth 1 and one non compact component) of $C_{\underline{t}_1}$ intersecting the boundary of a Milnor ball of $(C_{\underline{t}_2},0)$ for $0<t_1\ll\cdots\ll t_g\ll 1$. In both cases we use hypothesis (i) and Formula (13) to check that the msqh-smoothing $C_{\underline{t}_1}$ has $\frac{1}{2}\mu(C_0)_0$ ovals and one non compact component.

Conversely, suppose that $C_{\underline{t}_1}$ is an msqh-smoothing. Since $C_{\underline{t}_1}$ defines an sqh-smoothing of $(C_{\underline{t}_2},0)$ with parameter t_1, there are at most $\#(\mathrm{int}\Delta\cap\mathbf{Z}^2)$ ovals of depth 1. If no component of the smoothing $C^{(2)}_{\underline{t}_2}$ intersects $\{x_2=0\}$ then there is no oval of mixed

depth one for the smoothing $C_{\underline{t}_2}$ and therefore $C_{\underline{t}_1}$ is not a M-msqh-smoothing by (13). If there are $r \geq 1$ components of the smoothing $C^{(2)}_{\underline{t}_2}$ intersecting $\{x_2 = 0\}$ we prove that the maximal number of ovals of the smoothing $C_{\underline{t}_1}$ is less than or equal to $-r+1+\sum_{j=0}^{g-1}\left(\#(\mathrm{int}\Delta_j \cap \mathbf{Z}^2)+e_{j+1}-1\right)$. To see this we denote by $s_j \geq 1$ the number of real points in the intersection of the jth-component of the smoothing $C^{(2)}_{\underline{t}_2}$ with $\{x_2 = 0\}$, for $j = 1, \ldots, r$. We argue as in Lemma 8.1. If such a component is not an oval then it leads at most $s_r - 1$ ovals of mixed depth one; if this component is an oval then it contributes with at most s_r ovals of mixed depth one. If there are $0 \leq r' \leq r$ ovals of $C^{(2)}_{\underline{t}_2}$ intersecting $\{x_2 = 0\}$ then the number of ovals of $C_{\underline{t}_1}$ of depth or mixed depth ≥ 2 is equal to the number of ovals of $C^{(2)}_{\underline{t}_2}$ of depth or mixed depth ≥ 1 minus r'. We deduce from these observations that if $C_{\underline{t}_1}$ is a M-msqh-smoothing then it must hold that $r = 1$ and $s_1 = e_1$, *i.e.*, $C^{(2)}_{\underline{t}_2}$ is in maximal position with respect to the line $\{x_2 = 0\}$ and assertion (iii) holds. □

COROLLARY 9.2. – *Let $C_{\underline{t}_1}$ be a real non-degenerate msqh-smoothing of the real plane branch $(C, 0)$. We introduce the following conditions:*

(i) *$C^{(2)}_{\underline{t}_2}$ is a multi-Harnack smoothing of $(C^{(2)}, o_2)$.*
(ii) *$C_{\underline{t}_1}$ is a Harnack smoothing of the singularity $(C_{\underline{t}_2}, 0)$ with parameter t_1.*
(iii) *$P^{\hat{\Delta}_1}_{t_1=1}$ and $P_{\underline{t}_2}$ have non-compact regular intersection along Γ_1.*

Then the deformation $C_{\underline{t}_1}$ is a multi-Harnack smoothing of $(C, 0)$ if and only if conditions (i), (ii) *and* (iii) *hold.*

Proof. – It follows from Theorem 9.1 and Lemma 8.1 by induction on g. □

THEOREM 9.3. – *Any real plane branch $(C, 0)$ has a multi-Harnack smoothing.*

Proof. – We construct a multi-Harnack smoothing $C_{\underline{t}_1}$ of $(C, 0)$ by induction on g. If $g = 1$ the assertion is a particular case of Proposition 5.8. Suppose the result true for $g - 1$. Then by induction hypothesis we have constructed a multi-Harnack smoothing $C^{(2)}_{\underline{t}_2}$ of $(C^{(2)}, o_2)$. By Proposition 9.7 the local Newton polygon of $P_{\underline{t}_2}(x_1, y_1)$ has only one compact edge equal to Γ_1 and the peripheral roots of $P_{\underline{t}_2}$ along Γ are positive by Remark 9.6 if $0 < t_2 \ll 1$. By Proposition 5.8 and Lemma 8.1 there is a Harnack sqh-smoothing $C_{\underline{t}_1}$ of $(C_{\underline{t}_2}, 0)$ with parameter t_1, such that $P^{\hat{\Delta}_1}_{t_1=1}$ and $P_{\underline{t}_2}$ have regular intersection along Γ_1. The result follows by Corollary 9.2. □

EXAMPLE 9.15. – *We consider the constructions of a multi-Harnack smoothing of the real plane branch $(C, 0)$ defined by the polynomial $F = (y^2 - x^3)^3 - x^{10}$ studied in Examples 6.8, 7.5 and 9.4 . The Milnor number is equal to* 44.

The strict transform $C^{(2)}$ of $(C, 0)$ is an ordinary cusp. In Figure 2 we have represented a smoothing $C^{(2)}_{\underline{t}_2}$ of normalized type. We indicate the form of the deformation $C_{\underline{t}_2}$ inside a Milnor ball B for $(C, 0)$ in Figure 11; the small circle denotes a Milnor ball B_2 for the singularity obtained. The equations of $C_{\underline{t}_2}$ are of the form indicated in Example 9.4, up to changing the coefficients by some suitable real numbers. The smoothing $C_{\underline{t}_1}$ is the result of perturbing the singularity $(C_{\underline{t}_2}, 0)$ inside its Milnor ball and appears in Figure 12. Notice

that the ovals which appear in the smaller ball are infinitesimally smaller than the others. In this example there are only one oval of depth 2 and two mixed ovals of depth 1.

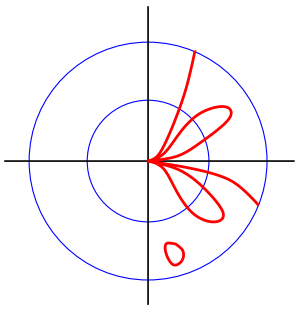

FIGURE 11. The deformation $C_{\underline{t}_2}$ inside the Milnor ball

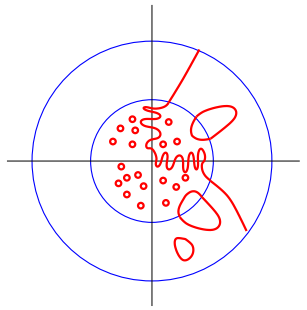

FIGURE 12. A multi-Harnack smoothing

The topological type of a multi-Harnack smoothing

The definition of the topological type (resp. signed topological type) of an msqh-smoothing $C_{\underline{t}_1}$ of a real plane branch is the same as in the 1-parametrical case (see Definition 5.1).

THEOREM 9.4. – *Let $(C,0)$ be a real branch. The topological type of multi-Harnack smoothings of $(C,0)$ is unique. There is at most two signed topological types of multi-Harnack smoothings of $(C,0)$. These types depend only on the sequence $\{(n_j,m_j)\}$ which determines and is determined by the embedded topological type of $(C,0)\subset(\mathbf{C}^2,0)$.*

Proof. – We prove by induction on g that there is one topological type (resp. at most two signed topological types) of multi-Harnack smoothings of $(C,0)$, determined by the sequence $\{(n_j,m_j)\}_{j=1}^g$ (resp. and in addition, an initial choice for the signed topological type of the Harnack smoothing $C^{(g)}_{\underline{t}_g}$: to be normalized or not (see Definition 5.10)). If $g=1$, by Proposition 5.11 there is a unique topological type of Harnack smoothing (and two signed topological types) which depends only on the triangle Δ_1. Suppose $g>1$. We consider a multi-Harnack smoothing $C_{\underline{t}_1}$ of $(C,0)$. It is easy to see by Corollary 9.2 and induction that $C^{(g)}_{\underline{t}_g}$ defines a sqh-Harnack smoothing of $(C^{(g)},o_g)$. By construction the singularity $(C^{(g)},o_g)$ is non-degenerate with respect to its Newton polygon in the coordinates (x_g,y_g). Since the smoothing $C^{(g)}_{\underline{t}_g}$ is Harnack then there are only one topological type and two signed topological types (see Proposition 5.11). By induction on g we assume that the (resp. signed) topological type of the msqh-smoothing $C^{(2)}_{\underline{t}_2}$ of $(C^{(2)},o_2)$ depends only on the sequence $\{(n_j,m_j)\}_{j=2}^g$ (resp. and in addition the initial choice for $(C^{(g)}_{\underline{t}_g},o_g)$). Since π_1 is an isomorphism over $\mathbf{C}^2\setminus\{0\}$ we deduce that for $0<t_2\ll\cdots\ll t_g\ll 1$ the (resp. signed) topological type of the deformation $C_{\underline{t}_2}$ is determined in $\mathbf{R}B\setminus\mathbf{R}B'$ where B (resp. $B'\subset B$) is a Milnor ball for $(C,0)$ (resp. for $(C_{\underline{t}_2},0)$). The msqh-smoothing $C_{\underline{t}_1}$ is built by the patchwork of the charts of $P^{\hat{\Delta}_1}_{t_1=1}$ inside $\mathbf{R}B'$ and of $\mathbf{R}C_{\underline{t}_2}$ in the closure of $\mathbf{R}B\setminus\mathbf{R}B'$, as described

by Lemma 9.12 and Theorem 5.1. By Corollary 9.2 it is enough to prove that the signed topological type of $P^{\hat{\Delta}}_{t_1=1} = 0$ is unique and only depends on Δ_1 and on the topology of $C_{\underline{t}_2}$ on $B \setminus B'$. This is consequence of Lemma 8.5.

In conclusion if $0 < t_1 \ll \cdots \ll t_g \ll 1$ the (resp. signed) topological type of $C_{\underline{t}_1}$ in B only depends on the sequence of triangles Δ_j, for $j = 1, \ldots, d$ (resp. and the initial choice). Notice that the datum of triangles Δ_j, for $j = 1, \ldots, g$ is equivalent to the sequence $\{(n_j, m_j)\}$ hence we deduce the result by Remark 6.1. □

We complete the description of the signed topological type of a multi-Harnack smoothing of a real plane branch by indicating the positions of the ovals in the quadrants of $\mathbf{R}^2$.

Let $C_{\underline{t}_1}$ be a multi-Harnack smoothing of the real plane branch $(C, 0)$. By Corollary 9.2 there are precisely $e_j - 1$ ovals of mixed depth j and $\#\mathrm{int}(\Delta_j \cap \mathbf{Z}^2)$ ovals of depth j, for $j = 1, \ldots, g$ (see Definition 9.10). The ovals of a multi-Harnack smoothing are not nested (see Remark 9.13).

Definition 9.16. – *We say that the multi-Harnack smoothing $C_{\underline{t}_1}$ of a real plane branch $(C, 0)$ is normalized if the signed topological type of the chart of $P^{\hat{\Delta}_g}_{t_g=1}$ is normalized (see Definition 5.10).*

Proposition 9.17. – *Let $C_{\underline{t}_1}$ be a multi-Harnack smoothing of a real plane branch $(C, 0)$. If the signed topological type of the chart of P_{Δ_g} is normalized, then the same happens for the signed topological type of the chart $P^{\hat{\Delta}_j}_{t_j=1}$, for $j = 1, \ldots, g-1$.*

Proof. – The proof is by induction on g, using Proposition 9.12 and that $\pi_j(\mathbf{R}^2_{>0}) \subset \mathbf{R}^2_{>0}$ by (8) at level j. □

Notation 9.18. – *If $C_{\underline{t}_1}$ is a normalized multi-Harnack smoothing of a real plane branch $(C, 0)$ then we label an oval O of depth or mixed depth j of $C_{\underline{t}_1}$ by $O^{(j)}_{r,s}$ in a unique way for $(r, s) \in \Delta_j \cap \mathbf{Z}^2$ with $r, s \neq 0$ for $j = 1, \ldots, g$.*

By Definition 9.10 such an oval $O^{(j)}_{r,s}$ appears as a slight perturbation of $\pi_1 \circ \cdots \circ \pi_{j-1}(\Omega^{(j)}_{r,s})$ where $\Omega^{(j)}_{r,s}$ is an oval of $C^{(j)}_{\underline{t}_j}$ of depth, or mixed depth, equal to one. The label $(r, s) \in \Delta_j \cap \mathbf{Z}^2$, $r, s \neq 0$ is determined by Remark 5.9, applied to the Harnack sqh-smoothing $C^{(j)}_{\underline{t}_j}$ of $C^{(j)}_{\underline{t}_{j+1}}$ with parameter t_j, for $j = 2, \ldots, g$. For $j = 1$ we define the label $O^{(1)}_{r,s}$ of an oval of depth one of $C_{\underline{t}_1}$ in a similar way by using Remark 5.9.

Proposition 9.19. – *If $C_{\underline{t}_1}$ is a normalized multi-Harnack smoothing of a real plane branch $(C, 0)$, then with Notation 9.18 we have that $O^{(j)}_{r,s} \subset \mathbf{R}^2_{k,l}$ where*

$$(k, l) = \begin{cases} (e_0 + s, r) & \text{if} \quad j = 1 \\ (e_{j-1} + s)n_1 n_2 \cdots n_{j-1}, (e_{j-1} + s)m_1 n_2 \cdots n_{j-1}) & \text{if } 1 < j \leq g. \end{cases}$$

Proof. – By hypothesis and Proposition 9.17 for $j = 1, \dots, g$ the signed topological type of the chart of $P_{t_j=1}^{\hat{\Delta}_j}$ is normalized. By Remark 5.9 we have that the component $\Omega_{r,s}^{(j)}$ of the chart $\mathrm{Ch}^*_{\Delta_j}(P_{t_j=1}^{\hat{\Delta}_j})$ is contained in the quadrant $\mathbf{R}^2_{e_{j-1}+s,r}$ with respect to the coordinates (x_j, y_j). We abuse of notation and denote in the same way the component $\Omega_{r,s}^{(j)}$ and connected component of the smoothing $C_{\underline{t}_j}^{(j)} \cap (\mathbf{R}^*)^2$ corresponding to it by Theorem 5.1. By construction the oval $O_{r,s}^{(j)}$, which appears as a slight deformation of $\pi_1 \circ \cdots \circ \pi_{j-1}(\Omega_{r,s}^{(j)})$, is contained in the same quadrant $\mathbf{R}^2_{k,l}$ as $\pi_1 \circ \cdots \circ \pi_{j-1}(\Omega_{r,s}^{(j)})$. The assertion follows then by the definition of the monomial maps. See Formula (8) and also Remark 6.5. □

REMARK 9.20. – *The above proposition describes also the topological type of the multi-Harnack smoothing (cf. Definition 5.10). If the multi-Harnack smoothing is normalized then the topological type is determined merely by the number $p(C,0)$ of ovals which are contained in $\mathbf{R}^2_{>0}$. Notice in this case that the non-compact component of the multi-Harnack smoothing separates the Milnor ball of $B(C,0)$ in two parts containing $p(C,0)$ non-nested ovals on one side and $\frac{1}{2}\mu(C)_0 - p(C,0)$ non-nested ovals on the other.*

10. Sizes of the ovals of multi-Harnack smoothings of real plane branches

In this section we prove that the ovals of a multi-Harnack smoothing of a real plane branch appear in regions given by various *asymptotic scales or sizes* relative to the coordinates x_1, y_1 and the curvettes (see Definition 6.2). The phenomena is similar to the analysis of the asymptotic concentration of the curvature of the Milnor fibers in the complex case, due to García Barroso and Teissier [7].

First we state some remarks about the sizes of ovals of sqh-smoothing C_t of $(C,0)$. As usual we denote by B a Milnor ball for $(C,0)$. If $a(t) \in \mathbf{R}\{t\}$ we write that $a(t) \sim t^\gamma$ if there exists a non-zero constant $c \in \mathbf{R}$ such that $a(t) \sim ct^\gamma$ when $t > 0$ tends to 0.

DEFINITION 10.1. – *Let $\phi : \mathbf{R}B \to \mathbf{R}$ be a real analytic function. An oval of C_t is of ϕ-*size *t^α if it is contained in a minimal set of the form $\{(x,y) \in \mathbf{R}B \mid |\phi(x,y)| \le |p(t)|\}$ where $p(t) \sim t^\alpha$, for $0 < t \ll 1$. An oval of C_t is of* size *(t^α, t^β) with respect to the local coordinates (x,y) if it is of x-size t^α and of y-size t^β.*

If an oval of C_t is of g-size t^α then for $0 < t \ll 1$ this oval is tangent to levels of the form $g(x,y) = \pm|p(t)|$ where $p(t) \sim t^\alpha$.

PROPOSITION 10.2. – *Let C_t be an sqh-smoothing of a real algebraic plane curve $(C,0)$ defined by a polynomial $P \in \mathbf{R}\{x,y\}[t]$. We use Notation 5.7 for the description of P. With this notation each oval of the smoothing is of size (t^n, t^m).*

Proof. – The critical points of the projection $C_t \to \mathbf{C}$, given by $(x,y) \mapsto x$, are those defined by $P_t = 0$ and $\frac{\partial P_t}{\partial y} = 0$. By the Weierstrass Preparation Theorem we can assume that the series P_t is a Weierstrass polynomial in y.

The critical values of this projection are defined by zeroes in x of the discriminant $\Delta_y P_t$. Using the non-degeneracy conditions on the edges of the local Newton polyhedron of $P(t,x,y)$ and Théorème 4 in [10] we deduce that the local Newton polygon of $\Delta_y P(t,x)$

has only two vertices: $(0,(n-1)m)$ and $((n-1)nm,0)$. By the Newton-Puiseux Theorem the roots of the discriminant $\Delta_y P$ as a function of x, express as fractional power series of the form:

$$x = t^n \epsilon_r, \text{ where } \epsilon_r \in \mathbf{C}\{t^{1/k}\} \text{ and } \epsilon_r(0) \neq 0, \text{ for } r = 1, \dots, (n-1)m, \tag{22}$$

which correspond to the root $x = 0$ of $\Delta_y P_0$. The critical values of the smoothing are among those described by (22). We may have also critical values of the form

$$x = \varepsilon_s \in \mathbf{C}\{t^{1/k}\} \text{ with } \varepsilon_s(0) \neq 0 \tag{23}$$

which are slight perturbations of critical values of the projection $C \to \mathbf{C}$ outside the Milnor ball B of $(C,0)$.

We argue in a similar manner for the projection $C_t \to \mathbf{C}$, given by $(x,y) \mapsto y$. □

PROPOSITION 10.3. – *The size of an oval O of depth j in a multi-Harnack smoothing $C_{\underline{t}_1}$ of the real plane branch $(C_0,0)$ with respect to (x_1,y_1) is equal to $(t_j^{e_1 n_1}, t_j^{e_1 m_1})$ (see Section 6 for notations).*

Proof. – Without loss of generality we suppose that the multi-Harnack smoothing is normalized. We label the ovals of $C_{\underline{t}_1}$ by using Notation 9.18. Since the smoothing is multi-Harnack we have that any oval $\Omega_{r,s}^{(j)}$ of depth 1 of the smoothing $C_{\underline{t}_j}^{(j)}$ of $C^{(j)}$ does not intersect the exceptional line $\{x_j = 0\}$.

By Proposition 10.2 the size of the oval $\Omega_{r,s}^{(j)}$ with respect to the coordinates (x_j,y_j) is equal to $(t^{n_j e_j}, t^{m_j e_j})$. It follows from this and Remark 6.5 that the u_j-size of this oval is equal to 1. We describe inductively the size of $\pi_1 \circ \cdots \circ \pi_{j-1}(\Omega_{r,s}^{(j)})$ by using the description of the monomial maps $\pi_1, \dots, \pi_{j-1}$ (see (8) at levels $1, \dots, j-1$). For $1 \leq l < j$ the size of the oval $\pi_l \circ \cdots \circ \pi_{j-1}(\Omega_{r,s}^{(j)})$ with respect to the coordinates (x_l,y_l) is equal respectively to

$$(t_j^{e_j n_j \cdots n_l},\ t_j^{e_j n_j \cdots n_{l+1} m_l}), \tag{24}$$

while for $2 \leq l < j$ the u_l-size is equal to one by Remark 6.5. In particular, the size obtained for $l = 1$ is $(t_j^{e_1 n_1}, t_j^{e_1 m_1})$.

By definition an oval of depth j appears as a slight perturbation of $\pi_1 \circ \cdots \circ \pi_{j-1}(\Omega_{r,s}^{(j)})$ since $0 < t_1 \ll \cdots t_{j-1} \ll t_j \ll 1$ (see Definition 9.10). Then it is easy to see that $\pi_1 \circ \cdots \circ \pi_{j-1}(\Omega_{r,s}^{(j)})$ and $O_{r,s}^{(j)}$ have the same size with respect to the coordinates (x_1,y_1). □

Ovals of mixed depth j are in between two asymptotic scales since by definition $t_j \ll t_{j+1}$. The precise statement is given in the following proposition. The proof is analogous to that of Proposition 10.3).

PROPOSITION 10.4. – *An oval of mixed depth j of the multi-Harnack smoothing $C_{\underline{t}_1}$ of $(C,0)$ is contained in a minimal box parallel to the coordinate axes and with two vertices of the form $(\sim t_j^{e_1 n_1}, \sim t_j^{e_1 m_1})$ and $(\sim t_{j+1}^{e_1 n_1}, \sim t_{j+1}^{e_1 m_1})$, for $j = 1, \dots, g-1$ (see Figure 13).*

PROPOSITION 10.5. – *Let $C_{\underline{t}}$ be a multi-Harnack smoothing of a real plane branch $(C,0)$. Let $2 \leq j \leq g$ and f_j denote the jth-curvette of Notation 6.2. The f_j-size of an oval of depth j of $C_{\underline{t}_1}$ is equal to t^{γ_j} where*

$$\gamma_j := e_j m_j + e_{j-1} m_{j-1} n_{j-1} + \cdots + e_2 m_2 n_2 \cdots n_{j-1} + e_1 m_1 n_1 \cdots n_{j-1}. \tag{25}$$

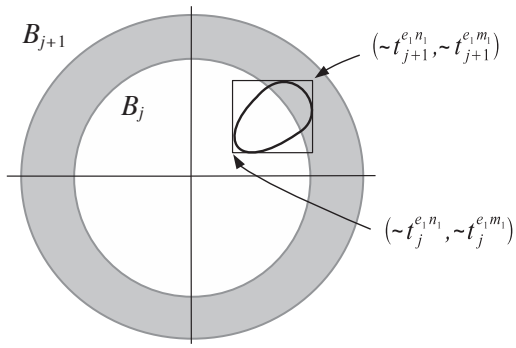

FIGURE 13. Scale of an oval of mixed depth j

Proof. – We abuse slightly of notation by denoting also by f_j the restriction of f_j to $\mathbf{R}B$, where B is a Milnor ball for $(C,0)$. We keep notations of the proof of Proposition 10.3. We deduce from Formula (11) that for $2 \leq j \leq g$ we have:

$$f_j \circ \pi_1 \circ \cdots \circ \pi_{j-1} = y_j\,(y_{j-1}^{n_{j-1}} \circ \pi_{j-1}) \cdots (y_1^{n_1 \cdots n_{j-1}} \circ \pi_1 \circ \cdots \circ \pi_{j-1}). \tag{26}$$

Notice that the f_j-size of $\pi_1 \circ \cdots \circ \pi_{j-1}(\Omega_{r,s}^{(j)})$ is equal to the f_j'-size of $\Omega_{r,s}^{(j)}$, where $f_j' := f_j \circ \pi_1 \circ \cdots \circ \pi_{j-1}$. Using (24) and Formula (26) we deduce that the f_j-size of $\Omega_{r,s}^{(j)}$ is equal to t^{γ_j}.

Finally, notice that $O_{r,s}^{(j)}$ appears as a slight perturbation of $\pi_1 \circ \cdots \circ \pi_{j-1}(\Omega_{r,s}^{(j)})$ in terms of the parameters $0 < t_1 \ll \cdots \ll t_{j-1} \ll t_j \ll 1$. It follows, by the same arguments of Proposition 10.3, that this oval has the same f_j-size. □

EXAMPLE 10.6. – *The oval of depth two $O_{(1,1)}^{(2)}$ of Example 9.15 (cf. Notation 9.18) has size (t_2^6, t_2^9) with respect to the coordinates (x_1, y_1) and f_2-size equal to t_2^{20}.*

PROPOSITION 10.7. – *With the notation of Proposition 10.5, set $\gamma_0 = e_1 m_1$ and $\gamma_1 = e_1 m_1$. Then, we have that*

$$\gamma_0 = (x_1, f)_0, \quad \gamma_1 = (y_1, f)_0, \quad \gamma_2 = (f_2, f)_0, \quad \ldots, \quad \gamma_g = (f_g, f)_0. \tag{27}$$

The sequence $\{\gamma_j\}_{j=0}^g$ generates the semigroup of the branch $(C,0)$.

Proof. – See [39] for instance, for the definition of the semigroup of the branch and its generators in terms of curvettes. The inductive formulas and the initial data for the sequence of generators of the semi-group of the branch $(C,0)$ with respect to the coordinates (x_1, y_1), are verified also by the sequence $\gamma_0, \ldots, \gamma_g$, hence both sequences coincide (see [39] and also [11]) □

THEOREM 10.1. – *Let $C_{\underline{t}}$ be a multi-Harnack smoothing of a real plane branch $(C,0)$. Then the sizes of ovals of depth j with respect to $x_1, y_1, f_2, \cdots, f_j$ for $j = 1, \ldots, g$ determine the embedded topological type of the branch $(C,0) \subset (\mathbf{C}^2, 0)$.*

Proof. – By Propositions 10.7 and 10.5 the size of ovals determine the sequence (27). It is well-known that the sequence (27) determines the sequence $\{(n_j, m_j)\}_{j=1,\ldots,g}$, hence also the embedded topological type of $(C,0)$ by Remark 6.1. □

11. Examples

EXAMPLE 11.1. – *We consider first the constructions of multi-Harnack smoothings of the real plane branch* $(C,0)$ *defined by the polynomial* $F=(y^2-x^3)^4-x^{12}y$. *The Milnor number is equal to* 86.

By computing as in Section 2 we find that $g=2$, $(n_1,m_1)=(2,3)$ and $(n_2,m_2)=(4,3)$. It follows that the strict transform $C^{(2)}$ of $(C,0)$ has local Newton polygon with vertices $(0,4)$ and $(3,0)$. Figure 3 shows the signed topological types of a Harnack smoothing $C^{(2)}_{\underline{t}_2}$ of $(C^{(2)},o_2)$. Then, the deformation $C_{\underline{t}_2}$, obtained by Proposition 9.12 is shown in Figure 14 (a) and (b). All the branches of the singularity at the origin have the same tangent line, the horizontal axis (this is not quite clear from Figure 14). The topology of the multi-Harnack smoothing is shown in Figure 15. Notice that, as stated in Theorem 9.4, the topological type of the resulting msqh-smoothing $C_{\underline{t}_2}$ is the same in cases (a) and (b) (meanwhile the signed topological types are different). The ovals inside the smaller ball are of depth 1, those intersecting the boundary are ovals of mixed depth 1 and the ovals in between both balls are of depth 2.

EXAMPLE 11.2. – *We show a Harnack smoothing of the real plane branch* $(C,0)$ *defined by the polynomial* $F=(y^2-x^3)^7-x^{24}$ *which is not multi-Harnack.*

By computing as in Section 2 we find that $g=2$, $(n_1,m_1)=(2,3)$, $(n_2,m_2)=(7,6)$ and $\mu(C)_0=296$. It follows that the strict transform $C^{(2)}$ of $(C,0)$ has local Newton polygon with vertices $(0,7)$ and $(6,0)$.

We exhibit first a smoothing $C^{(2)}_{\underline{t}_2}$, defined by a degree seven curve with Newton polygon equal to Δ_2. The construction begins by perturbing a degree four curve, composed of a smooth conic C_2 and two lines L and L' in Figure 16 (a), with four lines, shown in grey, each one intersecting the conic in two real points (see [37] for a summary of construction of real curves by small perturbations). The result is a smooth quartic C_4, as in Figure 16 (b), where we have indicated in gray the reference lines L and L' with the conic C_2. Then we perturb the union of C_2 and C_4, by taking six lines, as in Figure 16 (c). The result is a M-sextic in maximal position with respect to the line L. The union of both curves is a degree seven curve C_7, as shown in Figure 16(d), where we indicate also the reference lines L' and L''. Notice that in Figures 16 (c) and (d) the line at infinity changes. See also the construction of curves corresponding to Figures 13 and 14 of [37]. The result of a suitable perturbation of the singularities of C_7 is the M-degree seven curve shown in Figure 17 (a). Notice that this curve, which we call also C_7, is in maximal position with respect to the line L' and has maximal intersection multiplicity with the line L at the point $L\cap L''$. It follows that a polynomial defining C_7, with respect to affine coordinates (x,y) such that $x=0$ defines the line L, $y=0$ defines L' and L'' is the line at infinity, has generically Newton polygon with vertices $(0,0)$, $(7,0)$ and $(0,6)$, since C_7 passes by the point $L\cap L''$. The chart of C_7, with respect to its Newton polygon, is shown in Figure 17 (b).

We construct from the curve C_7 a sqh-smoothing $C^{(2)}_{\underline{t}_2}$ of $(C^{(2)},o_2)$. By Proposition 9.12 the topology of the deformation $C_{\underline{t}_2}$ can be seen from the chart associated to $C_{\underline{t}_2}$ (compare Figures 17 (b) and 18 (a), where we have indicated by the same number the corresponding peripheral roots). Then we define an msqh-Harnack smoothing $C_{\underline{t}_1}$ of $C_{\underline{t}_2}$ by gluing together

$\mathbf{R}C_{\underline{t}_2}$ on $B \setminus B'$ with the chart of a suitable Harnack curve on $Z(\Delta_1)$ on B (see Theorem 5.2 and Proposition 8.1). The topology of the msqh-Harnack smoothing $C_{\underline{t}_1}$ is shown in Figure 18 (b) where the numbers in this case indicate the number of ovals of depth one to be added. The curve $C_{\underline{t}_1}$ is not a multi-Harnack smoothing since it has two pairs of nested ovals. Nevertheless it is a Harnack smoothing since it is a M-smoothing with good oscillation with the coordinate axes.

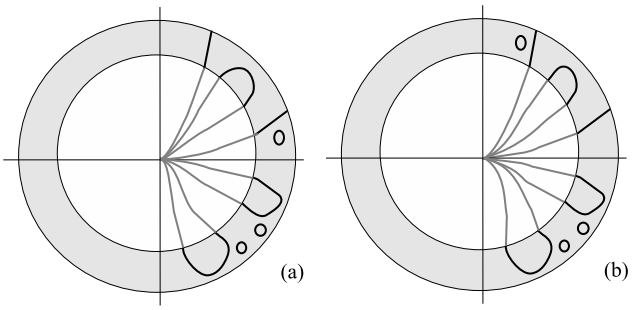

FIGURE 14. Figure (a) corresponds to the normalized case

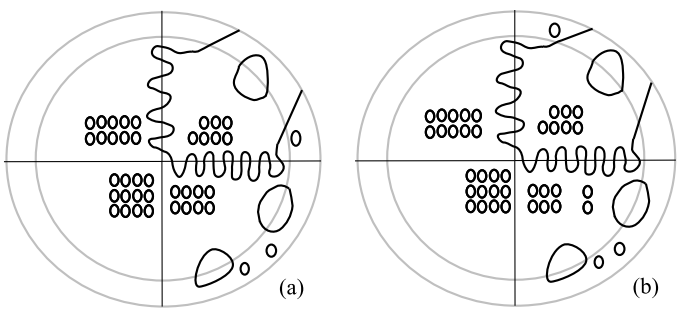

FIGURE 15.

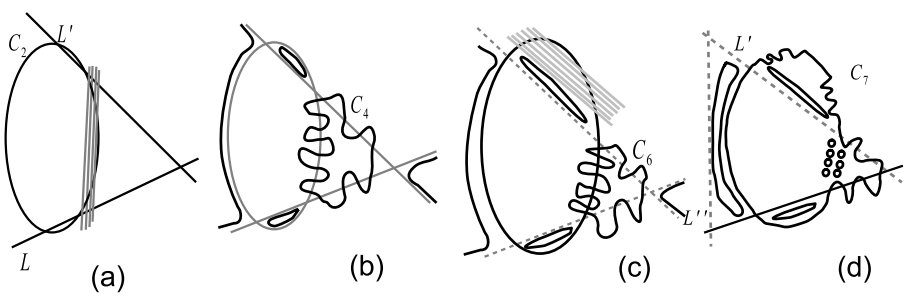

FIGURE 16.

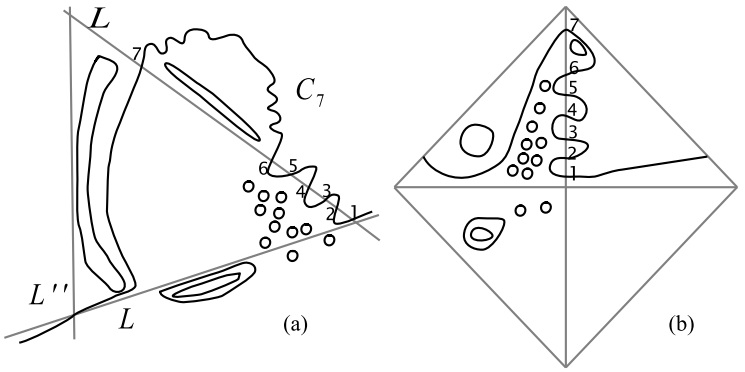

FIGURE 17.

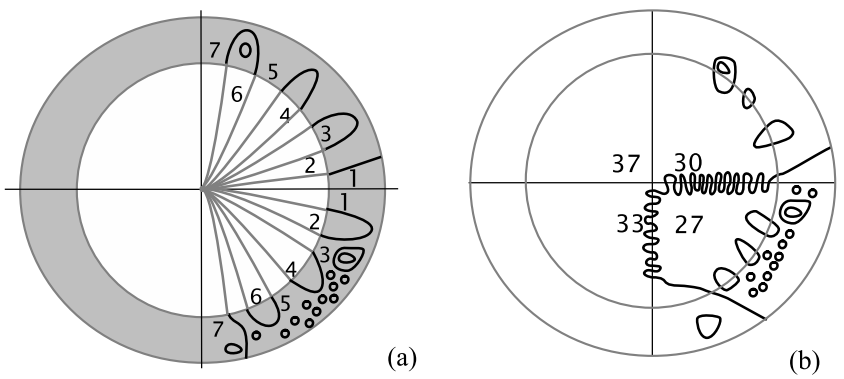

FIGURE 18.

Acknowledgements

The authors are grateful to Erwan Brugallé for suggesting Example 11.2.

REFERENCES

[1] N. A'CAMPO, M. OKA, Geometry of plane curves via Tschirnhausen resolution tower, *Osaka J. Math.* **33** (1996), 1003–1033.

[2] V. I. ARNOL′D, Some open problems in the theory of singularities, in *Singularities, Part 1 (Arcata, Calif., 1981)*, Proc. Sympos. Pure Math. **40**, Amer. Math. Soc., 1983, 57–69.

[3] F. Bihan, Viro method for the construction of real complete intersections, *Adv. Math.* **169** (2002), 177–186.

[4] L. Brusotti, Curve generatrici e curve aggregate nella costruzione di curve piane d'ordine assegnato dotate del massimo numero di circuiti, *Rend. Circ. Mat. Palermo* **42** (1917), 138–144.

[5] M. Forsberg, M. Passare, A. Tsikh, Laurent determinants and arrangements of hyperplane amoebas, *Adv. Math.* **151** (2000), 45–70.

[6] W. Fulton, *Introduction to toric varieties*, Annals of Math. Studies **131**, Princeton Univ. Press, 1993.

[7] E. García Barroso, B. Teissier, Concentration multi-échelles de courbure dans des fibres de Milnor, *Comment. Math. Helv.* **74** (1999), 398–418.

[8] I. M. Gel'fand, M. M. Kapranov, A. V. Zelevinsky, *Discriminants, resultants and multi-dimensional determinants*, Birkhäuser, 1994.

[9] R. Goldin, B. Teissier, Resolving singularities of plane analytic branches with one toric morphism, in *Resolution of singularities (Obergurgl, 1997)*, Progr. Math. **181**, Birkhäuser, 2000, 315–340.

[10] P. D. González Pérez, Singularités quasi-ordinaires toriques et polyèdre de Newton du discriminant, *Canad. J. Math.* **52** (2000), 348–368.

[11] P. D. González Pérez, Approximate roots, toric resolutions and deformations of a plane branch, to appear in *J. of the Math. Soc. of Japan*.

[12] A. G. Hovanskiĭ, Newton polyhedra, and the genus of complete intersections, *Funktsional. Anal. i Prilozhen.* **12** (1978), 51–61, English transl. *Functional Anal. Appl.* **12** (1978), 38–46.

[13] I. Itenberg, Viro's method and T-curves, in *Algorithms in algebraic geometry and applications (Santander, 1994)*, Progr. Math. **143**, Birkhäuser, 1996, 177–192.

[14] I. Itenberg, Amibes de variétés algébriques et dénombrement de courbes (d'après G. Mikhalkin), Séminaire Bourbaki 2002/03, exposé n° 921, *Astérisque* **294** (2004), 335–361.

[15] I. Itenberg, G. Mikhalkin, E. Shustin, *Tropical algebraic geometry*, Oberwolfach Seminars **35**, Birkhäuser, 2007.

[16] I. Itenberg, O. Y. Viro, Patchworking algebraic curves disproves the Ragsdale conjecture, *Math. Intelligencer* **18** (1996), 19–28.

[17] V. M. Kharlamov, S. Y. Orevkov, E. Shustin, Singularity which has no M-smoothing, in *The Arnoldfest (Toronto, ON, 1997)*, Fields Inst. Commun. **24**, Amer. Math. Soc., 1999, 273–309.

[18] V. M. Kharlamov, J.-J. Risler, Blowing-up construction of maximal smoothings of real plane curve singularities, in *Real analytic and algebraic geometry (Trento, 1992)*, de Gruyter, 1995, 169–188.

[19] V. M. Kharlamov, J.-J. Risler, E. Shustin, Maximal smoothings of real plane curve singular points, in *Topology, ergodic theory, real algebraic geometry*, Amer. Math. Soc. Transl. Ser. 2 **202**, Amer. Math. Soc., 2001, 167–195.

[20] A. G. Kouchnirenko, Polyèdres de Newton et nombres de Milnor, *Invent. Math.* **32** (1976), 1–31.

[21] D.-T. Lê, M. Oka, On resolution complexity of plane curves, *Kodai Math. J.* **18** (1995), 1–36.

[22] G. Mikhalkin, Real algebraic curves, the moment map and amoebas, *Ann. of Math.* **151** (2000), 309–326.

[23] G. Mikhalkin, H. Rullgård, Amoebas of maximal area, *Int. Math. Res. Not.* **2001** (2001), 441–451.

[24] J. Milnor, *Singular points of complex hypersurfaces*, Annals of Math. Studies **61**, Princeton Univ. Press, 1968.

[25] T. Oda, *Convex bodies and algebraic geometry. An introduction to the theory of toric varieties*, Ergebnisse Math. Grenzg. **15**, Springer, 1988.

[26] M. Oka, Geometry of plane curves via toroidal resolution, in *Algebraic geometry and singularities (La Rábida, 1991)*, Progr. Math. **134**, Birkhäuser, 1996, 95–121.

[27] M. Oka, *Non-degenerate complete intersection singularity*, Actualités Mathématiques., Hermann, 1997.

[28] M. Passare, H. Rullgård, Amoebas, Monge-Ampère measures, and triangulations of the Newton polytope, *Duke Math. J.* **121** (2004), 481–507.

[29] P. Popescu-Pampu, Approximate roots, in *Valuation theory and its applications, Vol. II (Saskatoon, SK, 1999)*, Fields Inst. Commun. **33**, Amer. Math. Soc., 2003, 285–321.

[30] J.-J. Risler, Un analogue local du théorème de Harnack, *Invent. Math.* **89** (1987), 119–137.

[31] J.-J. Risler, Construction d'hypersurfaces réelles (d'après Viro), Séminaire Bourbaki 1992/93, exposé n° 763, *Astérisque* **216** (1993), 69–86.

[32] E. Shustin, I. Tyomkin, Patchworking singular algebraic curves. I, *Israel J. Math.* **151** (2006), 125–144.

[33] E. Shustin, I. Tyomkin, Patchworking singular algebraic curves. II, *Israel J. Math.* **151** (2006), 145–166.

[34] B. Sturmfels, Viro's theorem for complete intersections, *Ann. Scuola Norm. Sup. Pisa Cl. Sci.* **21** (1994), 377–386.

[35] O. Y. Viro, Gluing of algebraic hypersurfaces, smoothing of singularities and construction of curves, in *Proceedings of the Leningrad International Topological Conference (Leningrad 1982)*, Nauka, 1983, 149–197.

[36] O. Y. Viro, Gluing of plane real algebraic curves and constructions of curves of degrees 6 and 7, in *Topology (Leningrad, 1982)*, Lecture Notes in Math. **1060**, Springer, 1984, 187–200.

[37] O. Y. Viro, Real plane algebraic curves: constructions with controlled topology, *Algebra i Analiz* **1** (1989), 1–73, English translation: *Leningrad Math. J.*, **1** (1990), 1059–1134.

[38] O. Y. Viro, Patchworking real algebraic varieties, *U.U.D.M. Report* **42** (Uppsala University, 1994).

[39] O. Zariski, *Le problème des modules pour les branches planes*, Hermann, 1986.

(Manuscrit reçu le 1er août 2008 ;
accepté, après révision, le 20 juillet 2009.)

Pedro Daniel González Pérez
Instituto de Ciencias Matemáticas
CSIC-UAM-UC3M-UCM
Departamento de Algebra
Universidad Complutense de Madrid
Plaza de las Ciencias 3
28040 Madrid, Spain
E-mail: pgonzalez@mat.ucm.es

Jean-Jacques Risler
Institut de Mathématiques de Jussieu
Équipe Analyse algébrique
Case 247
4 Place Jussieu
75252 Paris Cedex, France
E-mail: risler@math.jussieu.fr