Astérisque

S. NEWHOUSE
J. PALIS

Cycles and bifurcation theory

Astérisque, tome 31 (1976), p. 43-140
<http://www.numdam.org/item?id=AST_1976__31__43_0>

© Société mathématique de France, 1976, tous droits réservés.

L'accès aux archives de la collection « Astérisque » (http://smf4.emath.fr/Publications/Asterisque/) implique l'accord avec les conditions générales d'utilisation (http://www.numdam.org/conditions). Toute utilisation commerciale ou impression systématique est constitutive d'une infraction pénale. Toute copie ou impression de ce fichier doit contenir la présente mention de copyright.

NUMDAM
Article numérisé dans le cadre du programme
Numérisation de documents anciens mathématiques
http://www.numdam.org/

Société Mathématique de France
Astérisque 31 (1976)

CYCLES AND BIFURCATION THEORY

S. Newhouse and J. Palis

Department of Mathematics and Instituto de Matematica
University of N.C. Pura Aplicada
Chapel Hill, N.C. Rio de Janeiro, Brazil

CYCLES AND BIFURCATION THEORY

by S. Newhouse and J. Palis*†

Morse-Smale systems, vector fields or diffeomorphisms, play a fundamental role in the qualitative theory of dynamical systems. A special class of them was originally defined by Andronov and Pontrjagin [2] in their characterization of structurally stable differential equations on the two-dimensional disk. Later, Peixoto showed that this class was open and dense in the space of vector fields on any compact surface [23]. Extending these results to higher dimensions, it has been shown that Morse-Smale systems are structurally stable and that they form a dense open set of gradient vector fields on any compact manifold [20], [22], [30]. Thom has related them to models for phenomena in nature in his extraordinary book, "Stabilité Structurelle et Morphogénèse," [40].

A large class of Morse-Smale diffeomorphisms can be obtained as elements of the flows generated by Morse-Smale vector fields without closed orbits. From those, via isotopy, one may reach many other types of structurally stable diffeomorphisms. Recently, Smale proved that any diffeomorphism is isotopic to an Ω-stable one with a zero-dimensional non-wandering set, and then Shub and Williams pointed out that these Ω-stable diffeomorphisms may be made structurally stable [34]. Later,

---

*Research partially supported by a joint program sponsored by the National Science Foundation, U.S.A., and the Conselho Nacional de Pesquisàs, Brasil.

†The second author was a Guggenheim Fellow when part of this research was done.

Shub showed this could be done with C^0 small approximations [26]. When these structurally stable diffeomorphisms can be further isotoped to a Morse-Smale diffeomorphism is one of the subjects in the paper [28] by Shub and Sullivan.

It is known that the presence of cycles in Axiom A systems prevents Ω-stability [21], [33]. Indeed, one may perturb in this case to obtain Ω-explosions. Part of the motivation for [18] and the present paper came from trying to control the Ω-explosions which arise in this manner. However, the general analysis of Ω-explosions is very complicated, and a complete description of the phenomenon still remains to be given.

Bifurcation theory is concerned with the changes in orbit structure of systems depending on a set of parameters. We will mainly be concerned with the generic point of view. A subset $\mathcal{B}$ of the space Φ of arcs ξ of dynamical systems is called residual if it contains a countable intersection of dense open sets. Properties true for such residual sets $\mathcal{B}$ are called generic properties, and one says they are true "for most ξ" in Φ. Our interest is in the generic way in which structural stability breaks down in one parameter families of dynamical systems. This problem was studied by Sotomayor in the case of vector fields on two dimensional manifolds [35], and many authors have investigated related phenomena [1], [3], [6], [24], [25], [36], [39].

An understanding of the generic types of bifurcations (i.e., places where structural stability fails) in the Smale and Shub-Sullivan isotopies is very important. The results in this paper as well as in [18] provide, in our estimation, many of the basic ingredients necessary to describe these bifurcations.

In [18], we studied bifurcations of Morse-Smale systems from the following point of view. Take any compact C^∞ manifold M without boundary,

and denote by MS, the set of Morse-Smale diffeomorphisms on M. Let $\{\xi_t : 0 \le t \le 1\}$ be an arc of diffeomorphisms of M with $\xi_0 \in$ MS. As long as ξ_t remains in MS for increasing t, it will be topologically conjugate to ξ_0. Suppose for some $t = b_0$, ξ_{b_0} ceases to be in MS. The question is: what can be said about the orbit structure of ξ_t for t near b_0 with $t \ge b_0$? In particular, how often will those ξ_t's be structurally stable and what kinds of stable ξ_t's appear? These questions were considered in [18] under the assumption that either $L^-(\xi_{b_0})$ or $L^+(\xi_{b_0})$ is finite. Here, $L^-(\xi_{b_0})$ is the closure of the set of α-limit points of ξ_{b_0}, and $L^+(\xi_{b_0})$ is the closure of the set of ω-limit points of ξ_{b_0}. A description of the kinds of ξ_{b_0} which generally appear at the first bifurcation point b_0 was given, and open conditions were presented which insure that there will exist structurally stable ξ_t near ξ_{b_0} for $t > b_0$. The kinds of stable diffeomorphisms to be found were also described.

Let us be more precise. Recall that if $L^-(\xi_{b_0})$ is finite, a <u>cycle</u> for ξ_{b_0} is a sequence of periodic orbits $o(p_1), \ldots, o(p_n)$ with $o(p_1) = o(p_n)$ such that for each $1 \le i < n$ there is a point $x_i \in M$ with p_i in the α-limit set of x_i and p_{i+1} in the ω-limit set of x_i. The cycle is called <u>equidimensional</u> if all the stable manifolds of the p_i's have the same dimension. The simplest situation occurs when there are no cycles for ξ_{b_0}. Then, one can find a sequence of submanifolds of M, $M = M_n \supset M_{n-1} \supset \ldots \supset M_1$ such that ξ_{b_0} takes each M_i into its interior and the largest ξ_{b_0}-invariant subset of $M_i - M_{i-1}$ consists of a single

periodic orbit. In this case there is an interval U about b_0 in [0,1] such that $\xi_t \in MS$ for t in an open dense subset U_1 of U. The set $U - U_1$ may be finite, countable, or even contain perfect totally disconnected (Cantor) sets [18].

However, when ξ_{b_0} has cycles, the analysis becomes delicate, and a complete description of the ξ_t for t near b_0 is not yet known. Under rather stringent conditions we showed in [18] that structurally stable ξ_t with infinite zero-dimensional non-wandering sets appear for t near b_0. In the present paper we improve this result considerably. In fact, the natural assumptions that $L^-(\xi_{b_0})$ $\left(\text{or } L^+(\xi_{b_0})\right)$ be finite and hyperbolic with an equidimensional cycle are sufficient.

Our results here involve delving more deeply into the structure of cycles. They can be summarized as follows.

In section 2, after some preliminaries, we will obtain a filtration theorem for applications to bifurcation theory, and we will show that the diffeomorphisms satisfying Axiom A and the strong transversality condition form an open set.

Section 3 concludes a proof that generically arcs ξ with ξ_0 in MS and $L^-(\xi_{b_0})$ finite form an open subset of the space of all one parameter families. With the exception of some important 1-cycle cases, this was proved in [18]. Here we will treat these 1-cycles to obtain the general theorem. Of course, the result also holds if $L^+(\xi_{b_0})$ is assumed finite. Moreover, if either $L^-(\xi_{b_0})$ or $L^+(\xi_{b_0})$ is finite, our analysis implies that the limit set $L(\xi_{b_0}) = L^-(\xi_{b_0}) \cup L^+(\xi_{b_0})$ has finitely many orbits. We will remove the asymmetry in these assumptions by proving the converse:

for most ξ, if $\xi_0 \in MS$ and $L(\xi_{b_0})$ has a finite number of orbits, then either $L^-(\xi_{b_0})$ or $L^+(\xi_{b_0})$ is finite. A fundamental tool in the analysis of theorem (3.1) of this section as well as theorem (4.2) of section 4 is the measure theoretic resolution of certain small denominator problems analogous to those familiar in celestial mechanics [13, §32].

In sections 4 and 5 it will be shown that generically whenever $\xi_0 \in MS$ and $L^-(\xi_{b_0})$ is finite, hyperbolic, and has an equidimensional cycle, there always exist structurally stable ξ_t with infinite zero-dimensional non-wandering sets for $t > b_0$ near b_0. As t approaches b_0, the topological types of these ξ_t's change, so there are many bifurcation points near b_0. However, in this case, the set of t's in $[b_0, b_0+\varepsilon)$ for which ξ_t is not structurally stable has small measure compared to ε for $\varepsilon > 0$ small. In fact, we conjecture that it has measure zero. Thus, in some sense it is most likely that ξ_t will be structurally stable for $b_0 < t < b_0 + \varepsilon$ with ε small provided that $L^-(\xi_{b_0})$ is finite and hyperbolic with an equidimensional cycle.

Finally, in section 6, we consider bifurcations of more general Axiom A systems. We will describe some examples and formulate several problems.

Let us summarize briefly the results concerning generic arcs with ξ_0 in MS. If $L^-(\xi_{b_0})$ is finite with no cycles, then for some $\varepsilon > 0$, $\xi_t \in MS$ for t in a dense open set in $[b_0, b_0 + \varepsilon)$. If $L^-(\xi_{b_0})$ is finite, hyperbolic, and has an equidimensional cycle, then for $\varepsilon > 0$ small there are infinitely many topologically distinct structurally stable ξ_t's with $L(\xi_t)$ infinite and $b_0 < t < b_0 + \varepsilon$. Borrowing Thom's terminology, one might say that one has an infinite unfolding in this latter case. Finally, the

set of arcs ξ with $L^-(\xi_{b_0})$ finite is open in the space of all arcs.

From the perspective adopted here and in [18], it is apparent that a fairly complete description of the bifurcation theory of Morse-Smale systems reduces to the following two conjectures.

Conjecture 1. For most arcs ξ with ξ_0 in MS, the limit set $L(\xi_{b_0})$ consists of finitely many orbits.

Conjecture 2. For most arcs ξ with ξ_0 in MS, there is an $\varepsilon > 0$ such that ξ_t is structurally stable for a dense open set of t in $[b_0, b_0 + \varepsilon)$.

Note that even if these conjectures have negative solutions, a general description of bifurcations of Morse-Smale systems would necessarily include our results, since they describe an open set of arcs of diffeomorphisms.

§2. Let us recall some notation and definitions. Given a compact connected C^∞ manifold M, denote by $\mathcal{D}^r(M)$ the space of C^r diffeomorphisms of M with the uniform C^r topology, $r \geq 1$. For $f \in \mathcal{D}^r(M)$, $p \in M$, the orbit of p, o(p), is the set $\{f^n(p): \ n = 0, \pm 1, \pm 2, \ldots\}$. The positive orbit $o_+(p)$ is $\{f^n(p): \ n \geq 0\}$ and the negative orbit $o_-(p)$ is $\{f^n(p): \ n \leq 0\}$. A point $y \in M$ is an ω-limit point of p if there is a sequence of integers $n_1 < n_2 < \ldots$ with $n_i \to \infty$ as $i \to \infty$ such that $f^{n_i}(p) \to y$ as $i \to \infty$; y is an α-limit point of p if there is a sequence $n_1 > n_2 > \ldots$ with $n_i \to -\infty$ as $i \to \infty$ and $f^{n_i}(p) \to y$. The set of ω-limit points (α-limit points) of p is denoted $\omega(p) = \omega(p,f)$ $\big(\alpha(p) = \alpha(p,f)\big)$. The ω-limit set of f is $\bigcup_{p \in M} \omega(p,f)$ and is denoted $L_\omega(f)$. Analogously, the α-limit set of f, $L_\alpha(f)$, is defined to be $L_\alpha(f) = \bigcup_{p \in M} \alpha(p,f)$. While each $\omega(p,f)$ is a closed subset of M, this is not generally true of $L_\omega(f)$, so we define $L^+(f) = \mathrm{Cl}\, L_\omega(f)$. Also, set $L^-(f) = \mathrm{Cl}\, L_\alpha(f)$. $L^+(f)$ and $L^-(f)$ are called, respectively, the <u>positive</u> and <u>negative limit sets</u> of f. The set $L(f) = L^-(f) \cup L^+(f)$ is called the <u>limit set</u> of f. A point $x \in M$ is non-wandering if for every neighborhood U of x in M, there is a positive integer n (depending on U) such that $f^n(U) \cap U \neq \emptyset$. The non-wandering set of f is denoted $\Omega(f)$. A subset $K \subset M$ is <u>invariant</u> or <u>f-invariant</u> if $f(K) = K$. Thus, $\Omega(f)$ is a closed invariant set, and L(f) is the smallest closed invariant set in M containing all α and ω limit points.

Let d be the distance function defined by some metric on M. Given any subset $K \subset M$, define the stable set of K by

$$W^s(K) = W^s(K,f) = \{y \in M: \ \mathrm{dist}\,\big(f^n(y), f^n(K)\big) \to 0 \ \text{ as } \ n \to \infty\},$$

and the unstable set of K by

$$W^u(K) = W^u(K,f) = \{y \in M: \text{ dist } \left(f^n(y), f^n(K)\right) \to 0 \text{ as } n \to -\infty\}.$$

Set $\hat{W}^u(K) = W^u(K) - K$ and $\hat{W}^s(K) = W^s(K) - K$.

A closed f-invariant set $\Lambda \subset M$ is called hyperbolic if there are a continuous splitting $T_\Lambda M = E^s \oplus E^u$, a constant $0 < \lambda < 1$, and a Riemann norm $|\cdot|$ on TM such that

(1) $T_x f(E^s_x) = E^s_{fx}$, $T_x f(E^u_x) = E^u_{fx}$, $x \in \Lambda$

(2) $|T_x f(v)| \le \lambda |v|$, $v \in E^s_x$, $x \in \Lambda$ and $|T_x f^{-1}(v)| \le \lambda |v|$, $v \in E^u_x$, $x \in \Lambda$.

As usual, we will also write $s = \dim E^s$ and $u = \dim E^u$ so $u + s = \dim M$.

If Λ is a hyperbolic set for f, then $W^u(x)$ and $W^s(x)$ are C^r injectively immersed copies of Euclidean spaces of dimension u and s, respectively [8]. A periodic point p of f is a point for which there is an integer $n > 0$ such that $f^n(p) = p$. The point p is called hyperbolic if no eigenvalue of $T_p f^n$ has absolute value equal to one. The set of periodic points of f is denoted P(f).

f is said to satisfy <u>Axiom A</u> if

(1) $\Omega(f)$ is hyperbolic

(2) $\mathrm{Cl}\, P(f) = \Omega(f)$.

In this case $W^u(\Omega(f)) = \bigcup_{x \in \Omega(f)} W^u(x) = M$ and

$W^s(\Omega(f)) = \bigcup_{x \in \Omega(f)} W^s(x) = M$ [9].

If f satisfies Axiom A, we say that f satisfies the <u>strong transversality condition</u> if $W^u(x)$ is everywhere transverse to $W^s(x)$ for all $x \in M$.

Let $AS = AS^r(M)$ denote the set of diffeomorphisms satisfying Axiom A and the strong transversality condition. $f \in AS$ is called

Morse-Smale if $\Omega(f)$ is finite. Denote the set of Morse-Smale diffeomorphisms by MS. It can be shown that $f \in AS$ iff $L^-(f)$ is hyperbolic and $W^u(x)$ is transverse to $W^s(y)$ everywhere for $x,y \in L^-(f)$ [15]. Thus $f \in MS$ if and only if $L^-(f)$ is finite and hyperbolic and $W^u(L^-(f))$ is transverse to $W^s(L^-(f))$.

Our main goals in this section are to establish a sufficiently general filtration theorem for applications to bifurcation theory and to prove that $AS^r(M)$ is open in $\mathcal{D}^r(M)$ for $r \geq 1$.

Let us review some basic facts about filtrations. Recall that given a diffeomorphism $f\colon M \to M$, a filtration for f is a decreasing sequence of submanifolds with boundary $M = M_k \supset \ldots \supset M_1 \supset M_0 = \emptyset$ of M (except M_k and M_0 of course) such that $f(M_i) \subset \operatorname{int} M_i$, $i = 1, \ldots, k$.

Filtrations were used in [20] as part of the proof that MS is open and more generally by Smale in [32] to get control on the non-wandering set. Since then they have been widely employed.

To construct a filtration for f we begin with a decomposition $L^-(f) = \Lambda_1 \cup \ldots \cup \Lambda_\ell$ where each Λ_i is a closed invariant set and $\Lambda_i \cap \Lambda_j = \emptyset$ for $i \neq j$. Say that $\Lambda_i \geq \Lambda_j$ if there is a sequence $\Lambda_i = \Lambda_{i_1}, \ldots, \Lambda_{i_m} = \Lambda_j$ such that $\operatorname{Cl} W^u(\Lambda_{i_s}) \cap \Lambda_{i_{s+1}} \neq \emptyset$ for $1 \leq s < m$. This defines an equivalence relation $\sim$ on $\{\Lambda_i\}$ by $\Lambda_i \sim \Lambda_j$ if and only if $\Lambda_i \geq \Lambda_j$ and $\Lambda_j \geq \Lambda_i$. Let $\gamma_1, \ldots, \gamma_k$ be the distinct equivalence classes. These in turn are naturally ordered by $\gamma_i \geq \gamma_j$ if and only if there are $\Lambda_\ell \in \gamma_i$, $\Lambda_m \in \gamma_j$ such that $\Lambda_\ell \geq \Lambda_m$. We may extend this partial ordering on $\{\gamma_i\}$ to a linear ordering which we also denote by $\geq$. Re-labeling the γ_i's we may assume $\gamma_k \geq \gamma_{k-1} \geq \ldots \geq \gamma_1$. We call this a filtration ordering of $\{\gamma_i\}$. Then we have

<u>(2.1) Proposition.</u> Corresponding to every filtration ordering $\gamma_k \geq \gamma_{k-1} \geq \cdot\cdot\cdot \geq \gamma_1$ there is a filtration $M = M_k \supset M_{k-1} \supset \cdot\cdot \supset M_1 \supset M_0 = \emptyset$ for f such that

$$(1) \quad \bigcup_{\Lambda_j \in \gamma_i} \Lambda_j \subset \bigcap_n f^n(M_i - M_{i-1})$$

$$(2) \quad \bigcap_{n \geq 0} f^n(M_i) = \bigcup_{j \leq i} W^u(\gamma_j) = \bigcup_{j \leq i} \mathrm{Cl}\, W^u(\gamma_j).$$

Here, of course, we define $W^u(\gamma_j) = \bigcup \{W^u(\Lambda_\ell): \ \Lambda_\ell \in \gamma_j\}$, for $1 \leq j \leq k$. The proof of (2.1) is the same as that of theorem (3.6) of [15] and need not be given here. With $L^-(f) = \Lambda_1 \cup \cdot\cdot\cdot \cup \Lambda_\ell$, we define a cycle (for $L^-(f)$) to be a sequence $\Lambda_{i_1}, \cdot\cdot\cdot, \Lambda_{i_\nu}$ with $\Lambda_{i_1} = \Lambda_{i_\nu}$ and $\hat{W}^u(\Lambda_{i_j}) \cap \hat{W}^s(\Lambda_{i_{j+1}}) \neq \emptyset$ for $1 \leq j < \nu$. Given a filtration $M_k \supset \cdot\cdot \supset M_0$ as above we will be interested in studying the structure of $\bigcap_{-\infty < n < \infty} f^n(M_i - M_{i-1})$. For this purpose it is convenient to know when $\bigcap_n f^n(M_i - M_{i-1})$ either contains a cycle or reduces to Λ_i. A condition which guarantees this is that each Λ_i be an isolated invariant set; that is, that there be a compact neighborhood U_i of Λ_i with $\bigcap_n f^n(U_i) = \Lambda_i$. In particular, $\bigcap_n f^n(U_i) \subsetneq \mathrm{int}\, U_i$. We record this as

<u>(2.2) Proposition.</u> Suppose $L^-(f) = \Lambda_1 \cup \cdot\cdot \cup \Lambda_\ell$ where each Λ_i is an isolated invariant set. Let γ_i be the equivalence class of $\{\Lambda_i\}$ under $\sim$. If γ_i contains more than one element, then it contains a cycle.

<u>Proof.</u> Assume $\Lambda_1, \Lambda_2 \in \gamma_i$ and $\Lambda_1 \neq \Lambda_2$. We first assert that the next statements are equivalent

(a) $\mathrm{Cl}\,\hat{W}^u(\Lambda_1) \cap \Lambda_2 \neq \emptyset$

(b) $\mathrm{Cl}\,\hat{W}^u(\Lambda_1) \cap \hat{W}^u(\Lambda_2) \neq \emptyset$

(c) $\mathrm{Cl}\,\hat{W}^u(\Lambda_1) \cap \hat{W}^s(\Lambda_2) \neq \emptyset$.

Clearly, (b) implies (a) and (c) implies (a). We show that (a) implies (b), and then leave to the reader the analogous verification of (a) implies (c). Assume that $\mathrm{Cl}\,\hat{W}^u(\Lambda_1) \cap \Lambda_2 \neq \emptyset$ and let U_2 be a compact neighborhood of Λ_2 with $\bigcap_n f^n(U_2) = \Lambda_2 \subsetneq \mathrm{int}\, U_2$.

Set $U_2^u = \bigcap_{n \geq 0} f^n(U_2)$ and $U_2^s = \bigcap_{n \leq 0} f^n(U_2)$. Then $U_2^u \cap U_2^s = \Lambda_2$.

Let $F = U_2^s - f(U_2^s)$. By analogy with [9], [20] we call F a fundamental domain for $W^s(\Lambda_2)$. We first claim that $F \neq \emptyset$. Indeed, if we assume that $U_2^s = f(U_2^s)$, then $U_2^s = f^j(U_2^s)$ for all $j \geq 0$, so $\bigcap_{n \leq 0} f^n(U_2) = U_2^s = \bigcap_{j \geq 0} f^j(U_2^s) = \bigcap_{n \in \mathbb{Z}} f^n(U_2) = \Lambda_2$. By Smale's lemma [15, Lemma (3.5)], there is a compact subneighborhood $Q \subset U_2$ with $\Lambda_2 \subset \mathrm{int}\, Q$ and $f^{-1}(Q) \subset \mathrm{int}\, Q$. Then any $x \in Q$ is such that $\alpha(x) \subset \Lambda_2$ in contradiction to the fact that $\mathrm{Cl}\,\hat{W}^u(\Lambda_1) \cap \Lambda_2 \neq \emptyset$. Thus $F \neq \emptyset$. Also, $\mathrm{Cl}\, F \cap \Lambda_2 = \emptyset$, so F is a proper fundamental domain for $W^s(\Lambda_2)$. Now we claim

(d) if V is any neighborhood of $\mathrm{Cl}\, F$, then $\bigcup_{n \geq 0} f^n(V) \cup U_2^u$ is a neighborhood of Λ_2 in M. Indeed, suppose there were a sequence $x_1, x_2, \ldots$ in U_2 with $x_i \to \Lambda_2$ as $i \to \infty$ and $x_i \notin \bigcup_{n \geq 0} f^n(V) \cup U_2^u$ for all i. For each i, let $n_i > 0$ be the first integer such that $f^{-n_i}(x_i) \notin U_2$. Since $x_i \notin U_2^u$, n_i exists. Moreover, $n_i \to \infty$ as $i \to \infty$ since $\Lambda_2 \subsetneq \mathrm{int}\, U_2$

and Λ_2 is invariant. Let y be a limit point of $\{f^{-n_i+1}(x_i)\}$. Then $f^n(y) \in U_2$ for all $n \geq 0$, but $f^{-1}(y) \notin \operatorname{int} U_2$. Thus, $y \in U_2^s - \operatorname{int}\big(f(U_2)\big)$. For large $j > 0$, $f^j(U_2^s)$ is near Λ_2, so there is an integer $j_0 > 0$ such that $y \in U_2^s - f^{j_0}(U_2^s) = U_2^s - f(U_2^s) \cup f(U_2^s) - f^2(U_2^s) \cup \ldots \cup f^{j_0-1}(U_2^s) - f^{j_0}(U_2^s)$ $= \bigcup_{0 \leq i \leq j_0-1} f^i(F) \subset \bigcup_{0 \leq i \leq j_0-1} f^i(V)$. But then for large ℓ, $x_\ell \in \bigcup_{0 \leq i \leq j_0-1} f^i(V)$ which is a contradiction. This proves (d). The completion of the proof of Proposition (2.2) now follows exactly as the proof of Proposition (3.10) of [15].

We now prove that AS is open in $\mathcal{D}^r$. The proof is analogous to that for MS in [20]. We first need some definitions and facts.

Suppose Λ is a hyperbolic set for a C^r diffeomorphism $f\colon M \to M$. For $x \in \Lambda$, $\varepsilon > 0$, let $W_\varepsilon^s(x) = \{y \in M\colon\ d\big(f^n(x), f^n(y)\big) \leq \varepsilon, \text{ for } n \geq 0\}$ and $W_\varepsilon^u(x) = \{y \in M\colon\ d\big(f^n(x), f^n(y)\big) \leq \varepsilon, \text{ for } n \leq 0\}$. For ε small, $W_\varepsilon^u(x)$ and $W_\varepsilon^s(x)$ are C^r disks tangent at x to E_x^u and E_x^s, respectively [8]. Further, Λ is said to have a local product structure if for $x, y \in \Lambda$, ε small, $W_\varepsilon^u(x) \cap W_\varepsilon^s(y) \subset \Lambda$. Λ has a local product structure if and only if it is an isolated invariant set [9]. Set $W_\varepsilon^u(\Lambda) = \bigcup_{x \in \Lambda} W_\varepsilon^u(x)$ and $W_\varepsilon^s(\Lambda) = \bigcup_{x \in \Lambda} W_\varepsilon^s(x)$. Then $W_\varepsilon^u(\Lambda)$ and $W_\varepsilon^s(\Lambda)$ are closed subsets of M for ε small, and from theorem (1.1) of [9] we know that $W^u(\Lambda) = \bigcup_{n \geq 0} f^n\big(W_\varepsilon^u(\Lambda)\big)$ and $W^s(\Lambda) = \bigcup_{n \leq 0} f^n\big(W_\varepsilon^s(\Lambda)\big)$ when Λ has a local product structure.

Given two subspaces H,K of T_yM, $y \in M$, define the angle between H and K to be $\measuredangle(H,K) = \inf \left\{ \left| \arccos \frac{\langle v_1, v_2 \rangle}{|v_1||v_2|} \right| \colon\ v_1 \in H - \{0\},\ v_2 \in K - \{0\} \right\}$

where $\langle , \rangle$ is the Riemann metric and $|\cdot|$ is its norm. The angle between two submanifolds at a point means the angle between their tangent spaces there. Suppose Σ_1 and Σ_2 are two smooth submanifolds in M which meet at a point y, and let $1 > c > 0$. We say that Σ_1 is c-transverse to Σ_2 at y if $T_y\Sigma_1 + T_y\Sigma_2 = T_yM$ and there is a subspace H of $T_y\Sigma_1$ such that $\dim H = \dim M - \dim T_y\Sigma_2$ and $\measuredangle(H, T_y\Sigma_1) > c$. We say that Σ_1 and Σ_2 are c-transverse (or meet c-transversely) if they are c-transverse at every point of their intersection. Similarly, if $\Sigma_1 = \bigcup_\alpha D_\alpha$ and $\Sigma_2 = \bigcup_\beta D'_\beta$ are unions of submanifolds, we say that Σ_1 is c-transverse to Σ_2 if each D_α is c-transverse to each D'_β. For a point $y \in F \subset M$, let $C(y,F)$ denote the connected component of y in F. Also write $B_\varepsilon(y)$ for the set of z's in M with $d(y,z) < \varepsilon$.

The next proposition is a generalized version of the λ-lemma [20].

<u>(2.3) Proposition.</u> Suppose Λ is a hyperbolic set for a C^r diffeomorphism $f\colon M \to M$. Choose $\varepsilon > 0$ so that each $W^u_\varepsilon(x)$ and $W^s_\varepsilon(x)$ are closed disks in M. Let $x_0 \in \Lambda$ and let Σ be a smooth disk such that $\dim \Sigma = \dim W^u(x_0)$ and Σ is c-transverse to $W^s_\varepsilon(x_0)$ at a point y with $c > 0$. Then given $\delta > 0$, there is an integer $n_0 > 0$ (depending only on c, f, and δ) such that for $n \geq n_0$, $C\big(f^n(y), f^n(\Sigma) \cap B_\varepsilon(f^n(x_0))\big)$ is a disk δ-C^r close to $W^u_\varepsilon\big(f^n(x_0)\big)$.

The proof of (2.3) is obtained by noting that if $z \in \bigcup_{n \geq 0} f^n(\Sigma)$ and $f^j(z)$ remains near $f^j(x_0)$ for $0 \leq j \leq N$ with N large, then $T_{f^n(z)}\Sigma$ is pressed toward $T_{f^n(x_0)} W^u_\varepsilon\big(f^N(x_0)\big)$.

Now let $f \in AS$. Then, from Smale [32], we know that $\Omega(f) = \Lambda_1 \cup \ldots \cup \Lambda_k$ where each Λ_i is a closed isolated invariant set and

$f|\Lambda_i$ has a dense orbit. The Λ_i's are called <u>basic sets</u> for f. Moreover, there are no cycles, so one has a filtration $M_k \supset M_{k-1} \supset \ldots \supset M_1 \supset M_0 = \emptyset$ with $f(M_i) \subset \operatorname{int} M_i$ and $\bigcap_n f^n(M_i - M_{i-1}) = \Lambda_i$ for all i.

From the Ω-stability theorem [33] (see [15] also), we know that if g is near f, then $\Omega(g) = \bigcup_{1 \le i \le k} \bigcap_n g^n(M_i - M_{i-1})$ is hyperbolic with periodic points dense, so g satisfies Axiom A. Hence we need to show that any g near f satisfies the strong transversality condition also. For this purpose it is convenient to introduce some more terminology.

For the following, g is always assumed C^r close to f. Set $\Lambda_i(g) = \bigcap_n g^n(M_i - M_{i-1})$, $W^u(\Lambda_i,g) = \{y \in M\colon\ g^n(y) \to \Lambda_i \text{ as } n \to -\infty\}$, etc.

Fix $\varepsilon > 0$ so that for $x,y \in \Lambda_i(g)$ with g near f, $W^u_\varepsilon(x,g)$ and $W^s_\varepsilon(y,g)$ meet in at most one point, and at such a point they make an angle greater than $c_1 > 0$ independent of x, y, and g.

For $\delta > 0$ we will say that x is δ-g-related to Λ_i if x lies in a C^r disk in $W^u(x,g)$ which is δ-C^r close to $W^u_\varepsilon(y,f)$ for some $y \in \Lambda_i$.

We prove by downward induction on $1 \le i \le k$ the following assertion:

H_i: Given $\delta > 0$, there are neighborhoods U_i of Λ_i in M and $\mathcal{N}_i$ of f in $\mathcal{D}^r(M)$ such that if $g \in \mathcal{N}_i$ and $x \in U_i$, then x is δ-g-related to $\Lambda_i(f)$.

Once this is done the transversality condition is obtained as follows. If g is near f, $W^\sigma_\varepsilon(\Lambda_i(g),g)$ is near $W^\sigma_\varepsilon(\Lambda_i(f),f)$ for $\sigma = s,u$ [8]. The assertion implies that if x is in $W^s_\varepsilon(\Lambda_i(g),g)$ and is near $\Lambda_i(g)$, then $W^u(x,g)$ contains a disk near some $W^u_\varepsilon(g,f)$, for some $y \in \Lambda_i(f)$, and hence near some $W^u_\varepsilon(z,g)$ with $z \in \Lambda_i(g)$. Thus $W^u(x,g)$ will be transverse to $W^s(x,g)$ at x. Since the orbit of every point enters some $W^s_\varepsilon(\Lambda_i(g),g)$ we conclude that $g \in AS$.

To begin the proof of the assertion, note that Λ_k must be a source, that is, $W^u_\varepsilon(\Lambda_k)$ is a neighborhood of Λ_k in M. Thus, H_k follows from the smooth dependence on f of the stable manifolds $W^u_\varepsilon(y,f)$, $y \in \Lambda_k$ (Theorem (7.4) of [8]).

Now assume that H_j has been proved for $i+1 \le j \le k$. We prove H_i. Let $F = W^s_\varepsilon(\Lambda_i) - f\left(W^s_\varepsilon(\Lambda_i)\right)$. By the generalized λ-lemma (2.3) and part (d) in the proof of Proposition (2.2), it suffices to show that there are a constant $c > 0$ and neighborhoods V of Cl F and $\mathcal{N}$ of f with the following properties. If $x \in V$ and $g \in \mathcal{N}$, then x lies in a C^r disk in $W^u(x,g)$ which meets F and is c-transverse to $W^s_\varepsilon(\Lambda_i)$.

It will be convenient to define $\mathrm{beh}\left(\Lambda_j | \Lambda_\ell\right)$, $j \ge \ell$, to be the maximal length of a sequence $\Lambda_j = \Lambda_{j_0}, \Lambda_{j_1}, \ldots, \Lambda_{j_s} = \Lambda_\ell$ such that $\hat{W}^u(\Lambda_{j_t}) \cap \hat{W}^s(\Lambda_{j_{t+1}}) \ne \emptyset$ for $0 \le t < s$.

First, suppose that Λ_j is a basic set for f with $\mathrm{beh}(\Lambda_j | \Lambda_i) = 1$. Then there is an integer $N_j > 0$ such that $W^u(\Lambda_j,f) \cap F \subset f^{N_j}\left(W^u_\varepsilon(\Lambda_j,f)\right)$. The transversality of $W^u(\Lambda_j,f)$ and $W^s(\Lambda_i,f)$ implies that $f^{N_j}\left(W^u_\varepsilon(\Lambda_j,f)\right)$ is c_2-transverse to $W^s_\varepsilon(\Lambda_i,f)$ for some $c_2 > 0$. Smooth dependence of the stable manifolds gives that for g near f, $g^{N_j}\left(W^u_\varepsilon(\Lambda_j(g),g)\right)$ is c_2-transverse to $W^s_\varepsilon(\Lambda_i,f)$. From H_{i+1}, we know that for g near f and x near Λ_j, x is δ_j-g-related to Λ_j with $\delta_j > 0$ small. This implies that if x is near $f^{N_j}\left(W^u_\varepsilon(\Lambda_j,f)\right)$ and g is near f, then x lies in a disk $g^{N_j}(\Sigma) \subset W^u(x,g)$ with Σ C^r close to some $W^u_\varepsilon(y,g)$ with $y \in \Lambda_j(g)$. Thus we have neighborhoods U of Λ_j, V of F, and $\mathcal{N}$ of f such that if $g \in \mathcal{N}$ and $x \in V \cap f^{N_j}(U)$, then

$W^u(x,g)$ is c_2-transverse to $W^s_\varepsilon(\Lambda_i,f)$. Let $B_\ell(\Lambda_i) = \bigcup \{\Lambda_j : \mathrm{beh}(\Lambda_j|\Lambda_i) \le \ell\}$ for $\ell \ge 1$. Proceeding as above we may choose an integer $N_1 > 0$ such that $W^u(B_1(\Lambda_i),f) \cap F \subset f^{N_1}(W^u_\varepsilon(B_1(\Lambda_i)))$ and neighborhoods U of $B_1(\Lambda_i)$ and V of F so that for g near f and $x \in V \cap f^{N_1}(U)$, $W^u(x,g)$ is c_3-transverse to F with $c_3 > 0$. Now if $\mathrm{beh}(\Lambda_j|\Lambda_i) = 2$, there is an integer $N_2 > 0$ such that $W^u(\Lambda_j,f) \cap F \subset f^{N_1}(U) \cup f^{N_2}(W^u_\varepsilon(\Lambda_j,f))$. Thus, we may repeat the above arguments to get that for x near $W^u(\Lambda_j,f) \cap F$, g near f, $W^u(x,g)$ is c_4-transverse to F with $c_4 > 0$. Continuing this way for all Λ_j with $\mathrm{beh}(\Lambda_j|\Lambda_i) > 0$ completes the proof.

§3. We begin here our work on bifurcation theory. Let $I = [0,1]$, and for $k \geq 1$, $r \geq 1$, let $\Phi^{k,r} = C^k(I, \mathcal{D}^r(M))$ denote the space of C^k mappings of I into $\mathcal{D}^r(M)$ with the uniform C^k topology. An element $\xi \in \Phi^{k,r}$ is a C^k curve of C^r diffeomorphisms. For $\xi \in \Phi^{k,r}$, let $B(\xi) = \{t \in I: \ \xi_t \notin AS\}$ and let $b_0 = b_0(\xi) = \inf B(\xi)$. $B(\xi)$ is called the bifurcation set of ξ and $b_0(\xi)$ is the first bifurcation point of ξ. We will assume throughout that $b_0(\xi) < 1$.

Our first goal in this section is to complete the proof of (2.6) in [18]. We restate this as the following:

<u>(3.1) Theorem.</u> Fix $k \geq 1$, $r \geq 5$. There is a residual set $\mathcal{B} \subset \Phi^{k,r}$ such that the set of curves ξ in $\mathcal{B}$ such that $\xi_0 \in MS$ and $L^-(\xi_{b_0})$ is finite is open in $\Phi^{k,r}$.

Recall that if $L^-(f)$ is finite, $f \in \mathcal{D}^r(M)$, a j-cycle is a sequence $o(p_{i_0}), \ldots, o(p_{i_j})$ with $o(p_{i_0}) = o(p_{i_j})$ and $\hat{W}^u(o(p_{i_k})) \cap \hat{W}^s(o(p_{i_{k+1}})) \neq \emptyset$. The proof of the theorem has been given in [18] when $L^-(\xi_{b_0})$ is not hyperbolic or when there is a j-cycle, $j > 1$. It has also been completed when $L^-(\xi_{b_0})$ is hyperbolic and there is a 1-cycle for which condition (4.7) of [18] holds. Any of these conditions implies that, generically, $L(\xi_{b_0})$ is finite. However, in section 7 of [18] we gave an example of an open set of arcs ξ in which condition (4.7) failed and $L^+(\xi_{b_0})$ was infinite.

Here we will prove Theorem (3.1) in the remaining case--when $L^-(\xi_{b_0})$ is finite hyperbolic with a 1-cycle but condition (4.7) is

violated. As a consequence we will see that the phenomena present in the above mentioned example are essentially the only ones which can occur generically if (4.7) fails. It should be pointed out that we will obtain a fairly complete description of the orbit structures of many of the diffeomorphisms ξ_{b_0} which occur. When convenient, we restrict to residual sets in $\Phi^{k,r}$ without further mention. Since $L^-(\xi_{b_0})$ is hyperbolic, we need only assume $r \geq 2$.

First, let us give the definition of a quasi-transversal intersection of two submanifolds. We thank H. Levine for a helpful conversation regarding the following. Let $\mathbb{R}^{n_1}$, $\mathbb{R}^{m-n_1}$ be the Euclidean spaces of dimensions n_1, $m-n_1$, and let $\pi\colon \mathbb{R}^{n_1} \times \mathbb{R}^{m-n_1} \to \mathbb{R}^{m-n_1}$ be the natural projection. Let $\phi_i\colon N_i \to M$, $i = 1,2$, be two smooth embeddings into M with $\dim N_i = n_i$, $\dim M = m$, and let $y \in \phi_1(N_1) \cap \phi_2(N_2)$. Say that y is a quasi-transversal intersection of $\phi_1(N_1)$ and $\phi_2(N_2)$ if the following statement is true. There is a diffeomorphism ψ mapping $\mathbb{R}^{n_1} \times \mathbb{R}^{m-n_1}$ onto a neighborhood U of y in M such that

(1) $\psi(\mathbb{R}^{n_1} \times 0) \subset \phi_1(N_1)$, $\psi((0,0)) = y$

(2) the linear map $A_y = T_{\phi_2^{-1}(y)}\pi\psi^{-1}\phi_2\colon T_{\phi_2^{-1}(y)}N_2 \to \mathbb{R}^{m-n_1}$ has rank $m - n_1 - 1$

(3) if $L = \ker A_y \neq (0)$, then the intrinsic second derivative map from $L \otimes L$ to $\mathbb{R}^{m-n_1}/_{\text{Image } A_y} \approx \mathbb{R}$ is non-degenerate.

For the definitions in (3), see pages 151 - 152 of the book "Stable Mappings and their Singularities," by M. Golubitsky and V. Guillemin.

Now we turn to the proof of Theorem (3.1). Assume $L^-(\xi_{b_0})$ is finite, hyperbolic, has a 1-cycle, and condition (4.7) of [18] does not hold. We may suppose that $L^-(\xi_{b_0}) = o(p) \cup \Gamma$ with $\{p\} \cup \Gamma$ a finite set of hyperbolic periodic points, and that $\hat{W}^u(o(p)) \cap \hat{W}^s(o(p))$ consists of one orbit $o(x)$ of quasi-transversal intersections. By Theorem (2.2) of [18], we may assume that all other intersections of stable and unstable manifolds are transverse. For simplicity, assume p is fixed by ξ_{b_0}, the arguments being similar in the general case. Let $f = \xi_{b_0}$ and $\{\lambda_1, \ldots, \lambda_u, \mu_1, \ldots, \mu_s\}$ be the eigenvalues of $T_p f$ with $|\mu_s| \le |\mu_{s-1}| \le \ldots \le |\mu_1| < 1 < |\lambda_1| \le |\lambda_2| \le \ldots \le |\lambda_u|$. It will be assumed that all eigenvalues have multiplicity one, and that $|\mu_1| > |\mu_2|$ and $|\lambda_1| < |\lambda_2|$.

<u>(3.2) Lemma.</u> For a dense open set of ξ's, the weakest expanding eigenvalue λ_1 of $T_p f$ is real and positive.

<u>Proof.</u> Openness is obvious, so we need only prove density. Let $\bar{D}^s$ and $\bar{D}^u$ denote the closed unit balls in $\mathbb{R}^s$ and $\mathbb{R}^u$, respectively. We may choose a neighborhood U of p in M and a C^r diffeomorphism $\phi\colon U \to \bar{D}^s \times \bar{D}^u$ such that the positive orbit $o_+(x) \subset U$, $\phi(p) = (0,0)$, $\phi^{-1}(\bar{D}^s \times \{0\}) \subset W^s(p)$, and $\phi^{-1}(\{0\} \times D^u) \subset W^u(p)$. Let $D^s = \phi^{-1}(\bar{D}^s \times \{0\})$ and $D^u = \phi^{-1}(\{0\} \times \bar{D}^u)$ and identify U with $D^s \times D^u$. Let $\pi^s\colon U \to D^s$ and $\pi^u\colon U \to D^u$ be the natural projections. We may suppose $x \in D^s$. Since x is a quasi-transversal intersection of $W^s(p)$ and $W^u(p)$, $\dim(T_x \pi^u T_x W^u(p)) = u - 1$. Assume λ_1 is not real and positive. From

this and the other properties of quasi-transversal intersections, it follows that

(a) $\{0\} \times D^u \subset \partial_1 W^u(p)$ where $\partial_1 W^u(p) = \bigcap \{\mathrm{Cl}\, F\colon\ F \subset W^u(p)$ and $W^u(p) - F$ is compact$\}$

and (b) if $y \in D^u$, there are a subdisk D_0^u of $D^u \cong \{0\} \times \bar{D}^u$ containing y and an infinite sequence $D_1^u, D_2^u, \ldots$ of disks in $W^u(p)$ which accumulate on D_0^u uniformly in the C^1 sense.

Assume for the moment that (a) and (b) have been proved. Then, since $\bigcup_{n \geq 0} f^n(D^u) = W^u(p)$, (b) implies that if D_0^u is small, then each D_i^u is also accumulated upon in the C^1 sense by u-disks in $W^u(p)$. The last mentioned u-disks have the same property so that we may find a disjoint family of u-disks $\{D_\alpha^u\}$ satisfying the following.

(c) $D_\alpha^u \subset W^u(p)$

(d) there is a positive number $\delta > 0$ such that $\operatorname{diam} D_\alpha^u > \delta$ for all α.

(e) each D_α^u is a limit in the C^1 sense of other u-disks in $\{D_\alpha^u\}$

(f) y is a limit point of $\bigcup_\alpha D_\alpha^u$.

These properties imply that $\mathrm{Cl}\left(\bigcup_\alpha D_\alpha^u\right)$ will have uncountably many components near y, and hence there are points in $[\mathrm{Cl}\, W^u(p) - W^u(p)] \cap U$.

Let Γ_1 be the set of periodic points q in Γ such that $\mathrm{Cl}\, W^u(q) \cap W^u(p) \neq \emptyset$. Standard filtration arguments give that $W^u(\Gamma_1)$ and $W^u(\Gamma_1) \cup W^u(p)$ are open sets in M. In fact, one may construct a filtration ordering (see §2 for definition) of the orbits in $L^-(f)$ such that orbits in Γ_1 precede $\{p\}$, and $\{p\}$ precedes orbits in $L^-(f) - \Gamma_1 \cup o(p)$. Then Proposition (2.1.2) implies that $M - W^u(\Gamma_1)$ and $M - W^u(\Gamma_1) \cup W^u(p)$

are closed sets in M. If U is small enough, then $U \subset W^u(\Gamma_1) \cup W^u(p)$. But then $[\mathrm{Cl}\, W^u(p) - W^u(p)] \cap U$ would have to meet $W^u(\Gamma_1)$ which is impossible and Lemma (3.2) is proved.

Now we sketch the proofs of (a) and (b). Consider first (a) when λ_1 is real and negative. We know λ_1 has multiplicity one and $|\lambda_1| < |\lambda_2|$. Let $\overline{D}^{uu}$ be a $(u-1)$-dimensional subdisk of $\overline{D}^u \subset \mathbb{R}^u$. The coordinates ϕ: $U \to \overline{D}^s \times \overline{D}^u$ may be chosen so that $D^{uu} \underset{\mathrm{def}}{=} \phi^{-1}(\{0\} \times \overline{D}^{uu})$ is an f^{-1}-invariant manifold tangent at p to the sum of the eigenspaces of $\{\lambda_2, \ldots, \lambda_u\}$ [10]. D^{uu} is called the (local) strong unstable manifold of p in D^u and it consists of the set of points y in D^u such that $d(f^n(y),p)\cdot k^{-n} \to 0$ as $n \to \infty$ where $|\lambda_1| < k < |\lambda_2|$.

Let π^u: $U \to D^u$ be the projection. Residually, we may suppose that $T\pi^u T_{f^n(x)} W^u(x) \to T_p D^{uu}$ as $n \to \infty$ in the Grassmann sense. The following figure illustrates the situation in dimension three.

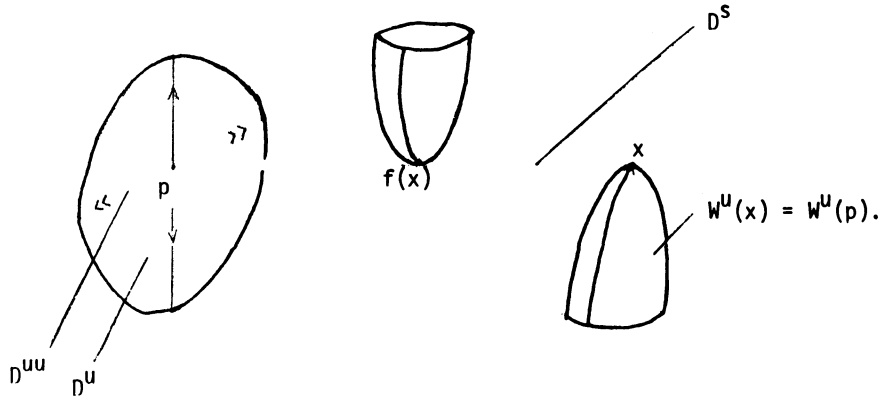

Figure 3.1.

Now since λ_1 is negative, and x is a quasi-transversal intersection, (a) is clear.

If λ_1 is not real, (residually) we may assume that $\lambda_1 = |\lambda_1| e^{i\theta}$ where $\frac{\theta}{2\pi}$ is irrational. Then $T\pi^u T_{f^n(x)} W^u(x)$ rotates densely in $T_p D^u$ as $n \to \infty$. Here (a) follows easily, as well.

For the proof of (b), observe the following. If $y \in D^u$ and $\varepsilon D^s \times D_0^u$ is a small product disk about y in U, and Σ is a small neighborhood of x in $W^u(p)$, then for large n, $f^{-n}(D_0^u \times \varepsilon D^s) \cap \Sigma$ contains u-disks Σ_n^u whose boundaries lie near $\operatorname{int} D^s \times \operatorname{bd} f^{-n}(D_0^u)$.

For n large enough, $f^n(\Sigma_n^u)$ will be C^1 near D_0^u. The estimates required to make this precise are analogous to those in the proofs of (3.9) and Theorem (4.2), so they will be left to the reader. The next figure illustrates this for the diffeomorphism described in Figure (3.1).

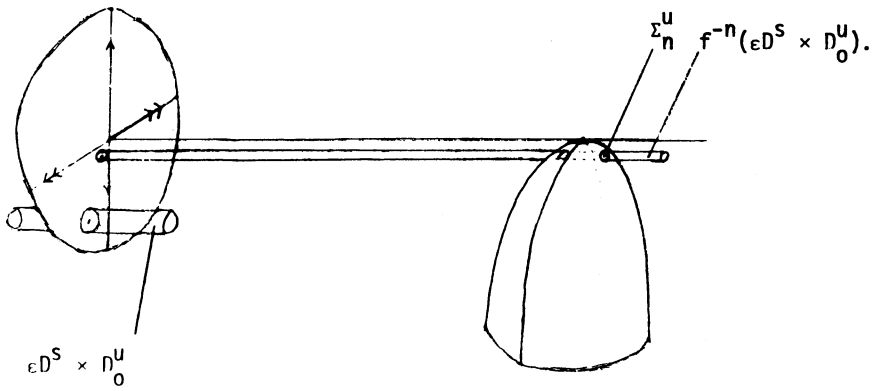

Figure 3.2.

This completes the proof of lemma (3.2).

Since λ_1 is real and positive, we may construct the disk D^{uu} as in the preceding proof. Moreover, residually we may assume that $o(x) \cap D^{uu} = \emptyset$. Let D^u_+ be the closure of the component of $D^u - D^{uu}$ containing $o(x)$, and define $D^u_- = Cl(D^u - D^u_+)$.

If we only wish ϕ to be C^1, we may assume the eigenspaces H_1 of λ_1 and H_2 of μ_1 are invariant by f near p in the coordinates ϕ.

<u>(3.3) Lemma.</u> Restricting ξ to a dense open set, we have $|\mu_1|\lambda_1 < 1$.

<u>Proof.</u> The property is clearly open. We will show that it is dense among the ξ for which $|\mu_1|\lambda_1 \neq 1$. The proof consists of showing that if $|\mu_1|\lambda_1 > 1$, then $f = \xi_{b_0}$ has infinitely many periodic points[1] which contradicts the fact that $L^-(f)$ is finite. Choose C^1 coordinates ϕ: $U \to \overline{D}^s \times \overline{D}^u$ as above. Let $y \in o(x) \cap \phi^{-1}(\{0\} \times \overline{D}^u)$. Say $y = f^{-n_0}(x)$. Let $\varepsilon > 0$ be small, and let $D_{1\varepsilon} = \phi^{-1}\left(\phi(y) + \varepsilon(\overline{D}^s \times \overline{D}^u)\right)$, $D_{2\varepsilon} = \phi^{-1}\left(\phi(x) + \varepsilon(\overline{D}^s \times \overline{D}^u)\right)$. Here, of course, $\phi(y) + \varepsilon(\overline{D}^s \times \overline{D}^u) = \{\phi(y) + \varepsilon(z,\omega),\ z \in \overline{D}^s,\ \omega \in \overline{D}^u\}$ and $\phi(x) + \varepsilon(\overline{D}^s \times \overline{D}^u)$ is similar. We may assume that $o_-(y)$ does not meet D^{uu} so that $o_-(y)$ approaches p near H_1. Similarly, assume $o_+(x)$ approaches p near H_2. Now if $|\mu_1|\lambda_1 > 1$, ε is small, and n is large, then $D_{3n\varepsilon} \equiv f^{-n}(D_{1\varepsilon}) \cap \bigcap_{0 \le j \le n} f^{-j}U \cap D_{2\varepsilon}$ is diffeomorphic to $D^s \times D^u$ and is very near $D_{2\varepsilon} \cap \phi^{-1}(\overline{D}^s \times \{0\})$. Since condition (4.7) of [18] is violated, we have either μ_1 is not real and positive, or, if it is, $x \in \partial_1 W^s(p)$. In the first case we may assume

---

[1] After this was written, we became aware that the two-dimensional version of this observation is related to results in the paper of Gavrilov and Silnikov [5].

$\frac{\mu_1}{|\mu_1|}$ is not a root of unity. Then in either case there is a sequence $\{x_n\}$, n large, such that x_n is near x, $x_n \in f^{-n-n_0}(D_{3n\varepsilon}) \cap D_{3n\varepsilon}$, and $\pi^u x_n$ approaches p in a small sector about H_1 in D^u. The last statement means that if $\pi^u x_n = (x_{n1}, x_{n2}) \in H_1 \times D^{uu}$, then $\frac{|x_{n2}|}{|x_{n1}|}$ is small.

It follows that, for n large, $f^{n_0+n}(D_{3n\varepsilon}) \cap D_{3n\varepsilon}$ has two components and $f^{n_0+n}|_{D_{3n\varepsilon}}$ behaves like Smale's well-known horseshoe diffeomorphism [31], [32]. The following figures illustrate the situation in dimension two.

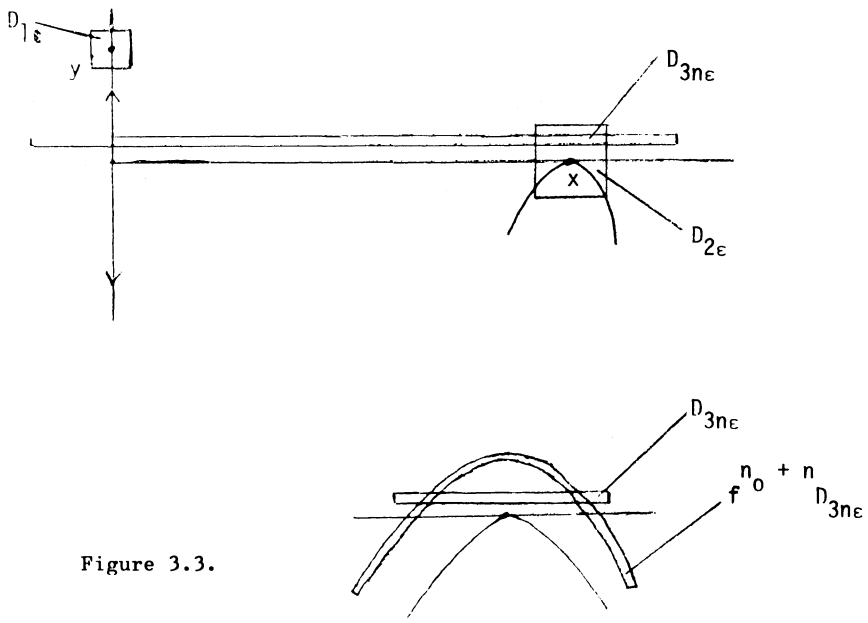

Figure 3.3.

Thus, $f^{n_0+n}|D_{3n\varepsilon}$ will have infinitely many periodic points. Actually, for our purposes here, it suffices to find one fixed point of $f^{n_0+n}|D_{3n\varepsilon}$ for each n large since $D_{3n\varepsilon} \cap D_{3m\varepsilon} = \emptyset$ for $n \neq m$ large. This may be accomplished using Lemma (2.10) in [15]. Lemma (3.3) is proved.

<u>(3.4) Lemma.</u> Restricting to a dense open set of ξ's, if $y \in W^u(p) - \overline{o(x)}$, then $\omega(y) \subset \Gamma_2$ where $\Gamma_2 = \{q \in L^-(\xi_{b_0}): \ q \neq p \text{ and } W^u(p) \cap W^s(q) \neq \emptyset\}$.

<u>Proof.</u> As before let $f = \xi_{b_0}$. We first show that the property of Lemma (3.4) is an open condition on ξ with ξ suitably restricted. Generically, we may assume that $T\pi^u T f^n T_x W^u(p)$ approaches D^{uu} in D^u as $n \to \infty$. Then there is a small u-disk Σ about x in $W^u(p)$ such that $o_+(\Sigma) \cap D^u \subset D^u_-$. Indeed, if this were not true, then $o_+(\Sigma) \supset D^u$ for every such disk Σ and the arguments in the proof of Lemma (3.2) would yield a contradiction. Assume that $L_\omega\left(W^u(p) - \overline{o(x)}\right) \subset \Gamma_2$. We may construct a filtration ordering of $L^-(f)$ in which $\{p\}$ precedes the orbits in Γ_2. Thus, there are compact submanifolds with boundary $M_1 \subset M_2$ of M such that $f(M_i) \subset \operatorname{int} M_i$, $\Gamma_2 \subset \operatorname{int} M_1$, and $\{p\} \cup o(x) \subset \bigcap_n f^n(M_2 - M_1)$. Note that $L_\omega\left(W^u(p) - \overline{o(x)}\right) \subset \Gamma_2$ implies that we actually have $\{p\} \cup o(x) = \bigcap_n f^n(M_2 - M_1)$. Now there is an integer $n_1 > 0$ such that $D^u_- - f^{-1}(D^u_-) \subset \operatorname{int} f^{-n_1}(M_1)$. Also, if Σ is small, then any point y in $\Sigma - \{x\}$ has the property that its positive orbit leaves U near $D^u_- - f^{-1}(D^u_-)$, so it enters $f^{-n_1}(M_1)$. Let $n_2 > 0$ be such that $f^{-n_2}(\Sigma) \subset D^u$. Adjusting Σ, we may assume $f^{-n_2}(\Sigma) \subset D^u - f^{-1}(D^u)$. Further, we may choose $n_3 > 0$ so that $f^{n_3}\left(D^u - f^{-1}(D^u) - f^{-n_2}(\Sigma)\right) \subset \operatorname{int} M_1$.

Now for η near ξ, t near b_0, let p_t be the unique hyperbolic fixed point of η_t near p. Similarly, denote its unstable manifold by $W^u(p_t)$. The structures D^u, D^u_-, Σ, etc. vary continuously in the C^r topology with f and those defined for η_t will be denoted by D^u_t, D^u_{-t}, Σ_t, etc. Given η, let $t_0(\eta)$ denote the first time t for which Σ_t meets $W^s(p_t)$, say at x_t. This will be a quasi-transversal intersection. We will show that

(1) $L_\omega\left(W^u(p_t) - x_t\right) \subset \Gamma_{2t}$ for $t \le t_0(\eta)$

(2) $L^-\left(\eta_{t_0(\eta)}\right)$ is finite and hyperbolic

(3) $t_0(\eta)$ is the first bifurcation point $b_0(\eta)$.

First of all, it is clear that $\eta_t^{n_3}\left(D^u_t - \eta_t^{-1}D^u_t - \eta_t^{-n_2}(\Sigma_t)\right)$ $\cup\ \eta_t^{n_1}\left(D^u_{-t} - \eta_t^{-1}D^u_{-t}\right) \subset \operatorname{int} M_1$ for η near ξ and t near b_0. Moreover, $L_\omega(\Sigma_t) \subset \operatorname{int} M_1$ for $t < t_0(\eta)$ and $L_\omega\left(\Sigma_t - \{x_t\}\right) \subset \operatorname{int} M_1$ for $t = t_0(\eta)$ since the positive orbits involved go near $D^u_{-t} - \eta_t^{-1}D^u_{-t}$. This proves (1).

To prove (2) and (3), first note that the usual proof that MS is open shows that $L^-\left(\eta_{t_0(\eta)}\right) \cap M_1$ and $L^-\left(\eta_{t_0(\eta)}\right) \cap M - M_2$ are finite and hyperbolic, and the transversality condition holds on orbits which do not pass near $\{p\} \cup o(x) = \bigcap_n f^n(M_2 - M_1)$. The conclusion of Lemma (3.3) for $f = \xi_{b_0}$ implies that negative orbits which pass near x always return farther and farther from x and then they eventually get captured in $M - M_2$. This also holds for η_t and x_t with $t \le t_0(\eta)$, thus proving (2). Since $b_0(\xi)$ was the first bifurcation point of ξ, Σ_{ξ_t} never has a non-transversal intersection with a stable manifold

of ξ_t for $t < b_0(\xi)$. Also, the unstable manifolds of periodic points in $M - M_2$ of ξ_t, $t \le b_0$, pass near x containing disks near Σ_{ξ_t}.

Since analogous results must hold for η_t with η near ξ, $t \le t_0(\eta)$, this proves (3).

Now we prove the density of the condition in Lemma (3.4). That is,

(3.5) for a dense set of ξ's, $L_\omega\left(W^u(p) - \overline{o(x)}\right) \subset \Gamma_2$.

Before doing this, let us remark that (3.5) and the preceding proof yield

(3.6) for a dense open set of ξ's, $\partial_1 W^u(p) \cap D^u \subset D^u_-$.

Indeed, we have shown that if $L_\omega\left(W^u(p) - \overline{o(x)}\right) \subset \Gamma_2$, then any point in $\partial_1 W^u(p) \cap D^u$ is a limit of the forward orbit of Σ. Also, these limits lie in D^u_- since $L_\omega\left(W^u(p)\right) \subset W^u(p) \cup \Gamma_2$.

To prove (3.5) it suffices to show that $L_\omega\left(W^u(p) - \overline{o(x)}\right) \cap W^u(p) = \emptyset$ with a dense set of restrictions on $f = \xi_{b_0}$.

Assume, by way of contradiction, that $L_\omega\left(W^u(p) - \overline{o(x)}\right) \cap W^u(p) \neq \emptyset$. It will be shown that, restricting f suitably, this implies the existence of a transversal intersection of $\hat{W}^u(p)$ and $\hat{W}^s(p)$. Since $L^-(f)$ is finite, this is ridiculous.

The proof has two main parts.

<u>Part 1.</u> Assuming there is a point $y \in W^u(p) - \overline{o(x)}$ with $\omega(y) \cap W^u(p) \neq \emptyset$, one can find a point $y_1 \in W^u(p)$ such that $\omega(y_1) = \overline{o(x)}$.

<u>Part 2.</u> If $y_1 \in W^u(p)$ is such that $\omega(y_1) = \overline{o(x)}$, then there is a point of transversal intersection of $\hat{W}^u(p)$ and $\hat{W}^s(p)$.

Whenever necessary we will restrict to dense conditions on f without further mention.

<u>Proof of Part 1.</u> Let $y \in W^u(p) - \overline{o(x)} = W^u(p) - W^s(p)$ be such that $\omega(y) \cap W^u(p) \neq \emptyset$. The fact that $L_\omega(W^u(p)) \subset W^u(p) \cup \Gamma_2$ implies that $\omega(y) \subset W^u(p)$. Suppose, by way of contradiction, that

(3.7) there is no point $y_1 \in W^u(p) - \overline{o(x)}$ with $\omega(y_1) = \overline{o(x)}$.

Let $\mathcal{G} = \{G \subset W^u(p)$: G is closed, f-invariant, and

$$L_\omega(G) \supsetneq \overline{o(x)}\}.$$

Since $\omega(y) \subset W^u(p)$, $p \in \omega(y)$. But $y \notin W^s(p)$, and hence $\omega(y)$ contains points in $o(x)$, so $\omega(y) \supset \overline{o(x)}$. Since $\omega(y) \neq \overline{o(x)}$, $\omega(y) \in \mathcal{G}$ and $\mathcal{G}$ is non-empty. Define a relation $>$ on $\mathcal{G}$ by $G_1 > G_2$ if and only if $G_1 \supsetneq G_2$ and there is a point $z \in G_1$ with $\omega(z) \supset G_2$. This relation is transitive and not reflexive, so it defines a strict partial ordering on $\mathcal{G}$.

We assert that (3.7) implies

(3.8) there is a totally ordered subset $\mathcal{G}_1 \subset \mathcal{G}$ such that $\bigcap_{G \in \mathcal{G}_1} G = \overline{o(x)}$.

If (3.8) were not true, then for any totally ordered subset $\mathcal{G}_1$ of $\mathcal{G}$, we would have $\bigcap_{G \in \mathcal{G}_1} G \in \mathcal{G}$. Thus, by Zorn's lemma, we would be able to find a minimal element $G_0 \in \mathcal{G}$. Then $G_0 \supsetneq \overline{o(x)}$ and for any $z \in G_0 - \overline{o(x)}$, we have $\omega(z) = G_0$. Thus G_0 has a point whose forward orbit is dense. This implies G_0 has a point z_1 whose backward orbit is dense, that is, $G_0 = \alpha(z_1)$. To see this, observe that if $z \in G_0$ and $\omega(z) = G_0$, then for any relatively open set $V \subset G_0$, $\bigcup_{n \geq 0} f^n(V)$ is

Letting $\{V_i\}$ be a countable basis for the topology of G_0, the Baire Category theorem gives that $\bigcap_i \left(\bigcup_{n \geq 0} f^n(V_i)\right)$ is dense in G_0. If z_1 is in this latter set, then $\alpha(z_1) = G_0$. The last fact says G_0 has to be contained in $L^-(f) \cap W^u(p) = \{p\} \subset \overline{o(x)}$ which is a contradiction.

Thus (3.7) implies (3.8). However, (3.8) cannot hold for the following reasons. Since $|\mu_1|\lambda_1 < 1$, there is a neighborhood U_1 of $\overline{o(x)}$ such that for any $z \in U_1 - \overline{o(x)}$, $\alpha(z) \cap U_1 = \emptyset$. But if (3.8) were true, then U_1 would necessarily contain closed f-invariant subsets, and hence their α-limit sets. Thus assuming (3.7) leads to a contradiction and Part 1 is proved.

<u>Proof of Part 2.</u> Let ϕ: $U \to \overline{D}^s \times \overline{D}^u$ be as in the proof of Lemma (3.2). Let $D^s = \phi^{-1}(\overline{D}^s \times \{0\})$, $D^u = \phi^{-1}(\{0\} \times \overline{D}^u)$. We may assume that f is C^∞, and (using Sternberg [38]) that $f|U$ and $f^{-1}|U$ are linear via the coordinates ϕ. Assume also that $x \in D^s$ and $f^{-n}(x) \in D^u$ for $n \geq n_0$. Let π^u: $D^s \times D^u \to D^u$, π^s: $D^s \times D^u \to D^s$, π_1^u: $D^u \to H_1$, π_1^s: $D^s \to H_2$ be the natural projections and set $\psi^u = \pi_1^u \pi^u$, $\psi^s = \pi_1^s \pi^s$. (Recall that H_1 is the eigenspace of λ_1 and H_2 is the eigenspace of μ_1.) We may arrange that $\psi^u f^{-n}(x) > 0$ in the real coordinates on H_1 for $n \geq n_0$. For $z \in U = D^s \times D^u$, let $D_z^u = \pi^{s^{-1}}(\pi^s z)$ and $D_z^s = \pi^{u^{-1}}(\pi^u z)$. If U is small enough, and $z \in U$, then $\psi^u|f^{n_0}(D_z^u)$ has a unique critical point $c(z)$ near x. Also, $c(z)$ is a C^∞ function of z. Given $y \in M$, let $E_y^s = \{v \in T_yM: \ |Tf^n(v)| \to 0 \text{ as } n \to \infty\}$. Part two is a consequence of the next assertion.

(3.9) Assume there are a constant $k > 0$ and an integer $N_0 > 0$ such that

$$\left|\log |\psi^u f^{-n}(x)| - \log |\psi^u c f^m(x)|\right| \geq \frac{k}{n^3}$$

for $n \geq N_0$, $m \geq N_0$, and $\psi^u \; c\, f^m(x) > 0$ in H_1. Then E^s_y is an s-dimensional subspace of T_yM, and if $\omega(y) = \overline{o(x)}$ and Σ_y is a smooth u-disk through y which is transverse to E^s_y, then $\bigcup_{n \geq 0} f^n(\Sigma_y)$ has non-empty transverse intersections with $\hat{W}^s(p)$.

Before proving (3.9), we show that it implies Part 2. We first verify that the hypotheses of (3.9) are true for a dense set of f's. Then, for one of these f's, suppose that $y \in W^u(p)$ and $\omega(y) = \overline{o(x)}$. It follows that there is a small neighborhood U of y such that $f^{-n}(y) \notin U$ for $n \geq 1$. Thus, we may perturb f in $f^{-1}(U)$ to get a small disk $\Sigma_y \subset \hat{W}^u(p) \cap U$ transverse to E^s_y. Hence, (3.9) implies Part 2.

Let us verify that the hypotheses of (3.9) are satisfied by a dense set of f's. Since $\lambda|\mu_1| < 1$, there is an integer $N_0 > n_0$ such that

(3.10) (a) $e^{\frac{1}{N_0^3}} < \frac{3}{2}$

(b) if either $|\psi^u f^{-n}(x)| \leq |\psi^u \; c\, f^m(x)|$ or

$$\left| |\psi^u f^{-n}(x)| - |\psi^u \; c\, f^m(x)| \right| < \frac{|\psi^u f^{-n}(x)|}{2}, \text{ then } n > m.$$

Also, assuming o(x) does not meet any eigenspace of T_pf, we have that $\psi^u f^{-n}(x) = \lambda^{n_0 - n} \psi^u f^{-n_0}(x)$ for $n \geq n_0$. Fix $0 < k < 1$ and consider the set of real numbers α, such that

(3.11) $\left| (n - n_0) \log \lambda^{-1} + \alpha - \log |\psi^u \; c\, f^m(x)| \right| < \frac{k}{n^3}$ for some $n > m \geq N_0$,

and $\psi^u \; c\, f^m(x) > 0$.

For fixed $n > N_0$, each such α is in an interval of length $\frac{2k}{n^3}$ about

$\log \psi^u \; c\, f^m(x) - (n - n_0) \log \lambda^{-1}$. Since $m < n$, there are at most $n - N_0$ such intervals. Thus, this set of α's has measure less than $\frac{2(n - N_0)\, k}{n^3} < \frac{2k}{n^2}$. Allowing n to vary gives a set of α's of measure less than $\sum_{n \geq N_0} \frac{2k}{n^2}$. The set A of α's for which (3.11) holds for all k, therefore, has measure zero. We claim that if the hypotheses of (3.9) fail, then $\log |\psi^u f^{-n_0}(x)| \in A$. As A has measure zero, this won't hold for a dense set of f's. To prove the claim it suffices to show that if $0 < k < 1$ is such that there are integers $n, m \geq N_0$ with $|\log |\psi^u f^{-n}(x)| - \log |\psi^u \; c\, f^m(x)|| < \frac{k}{n^3}$, then $n > m$. But th: follows from (3.10) and the definition of N_0.

Now we turn to the proof of (3.9). An embedded disk $D \subset U$ will be called a product disk if there is a diffeomorphism Φ: $U = D^s \times D^u \to D$ such that the maps $\pi^s \Phi | D^s \times \{z_2\}$ and $\pi^u \Phi | \{z_1\} \times D^u$ are embeddings for each $z_1 \in D^s$, $z_2 \in D^u$.

Given an embedding ζ: $D^s \to U$ with $\pi^s \zeta$ also an embedding, define $\rho_u(\zeta(D^s))^{\bullet} = \sup \left\{ \frac{|T(\pi^u \circ \zeta)v|}{|T(\pi^s \circ \zeta)v|} : |v| = 1,\ v \in T D^s \right\}$. For an embedding ζ: $D^u \to U$ with $\pi^u \zeta$ also an embedding, define $\rho_s(\zeta(D^u)) = \sup \left\{ \frac{|T(\pi^s \circ \zeta)v|}{|T(\pi^u \circ \zeta)v|} : v \in T D^u,\ |v| = 1 \right\}$. $\rho_u(\rho_s)$ is called the u-slope (s-slope) of $\zeta D^s (\zeta D^u)$. If Φ: $U \to D$ is a product disk, define $\rho_u(D) = \sup \left\{ \rho_u(\Phi | D^s \times \{z_2\}) : z_2 \in D^u \right\}$ and

$\rho_s(D) = \sup\left\{\rho_s\left(\Phi|\{z_1\}\times D^u\right):\ z_1 \in D^s\right\}$. Also, set

$\omega_u(D) = \max\limits_{z_1\in D^s}\left\{\operatorname{diam}\left(\{z_1\}\times D^u \cap D\right)\right\}$ and $\omega_s(D) = \max\limits_{z_2\in D^u}\left\{\operatorname{diam} D^s\times\{z_2\}\cap D)\right\}$.

$\omega_u(D)$ $\left(\omega_s(D)\right)$ is the u-width (s-width) of D.

In what follows the quantities $c_1, c_2, \ldots$ will denote constants independent of n which are defined in the first equation in which they appear.

There is a small neighborhood U_1 of x in M such that if $y \in U_1$, $f^n(y) \in U_1$, and $f^j(y) \in U$ for $0 \le j \le n-n_0$, $n \ge N_0$, then $f^{n-n_0}(y)$ is in a product disk $\overline{D}_{ny}$ about $f^{-n_0}(x)$ such that $\rho_u(\overline{D}_{ny}) < c_1$ and $\operatorname{diam}\overline{D}_{ny} \le c_2|\mu_1|^{n-n_0}$. Thus, if we set $D_{ny} = f^{n_0-n}(\overline{D}_{ny})$, then $y \in D_{ny}$, $\rho_u(D_{ny}) \le c_3\lambda_1^{n_0-n}|\mu_1|^{n-n_0}$, and $\omega_u(D_{ny}) \le c_4\lambda_1^{n_0-n}|\mu_1|^{n-n_0}$. Also, $\overline{D}_{ny}$ may be chosen so that $\pi^s D_{ny} = D^s$. Similarly, if $y \in U_1$, $f^j(y) \in U$ for $-n \le j \le -n_0$ and $f^{-n}(y) \in U_1$, then $f^{-n_0}(y)$ is in a product disk $E_{ny} \subset U$ such that $f^{n-n_0}(x) \in E_{ny}$, $\pi^u E_{ny} = D^u$, $\rho_s(E_{ny}) \le c_5\lambda_1^{n_0-n}|\mu_1|^{n-n_0}$, and $\omega_s(E_{ny}) \le c_6\lambda_1^{n_0-n}|\mu_1|^{n-n_0}$. Now let $y \in U_1$ be such that $\omega(y) = \overline{o(x)}$. Choose an increasing sequence of positive integers $n_1 < n_2 < \ldots$ such that $f^{n_i}(y) \in U_1$ and $f^{n_i}(y) \to x$ as $n_i \to \infty$. As $n_i \to \infty$, $n_i - n_{i-1} \to \infty$, so we may assume, starting far along the orbit of y, that $n_i - n_{i-1} > N_0$ for $i \ge 2$.

For $\varepsilon > 0$, $z \in U$, define the ε-sector $S_\varepsilon(D_z^u)$ about D_z^u by

$$S_\varepsilon(D_z^u) = \{(v_1,v_2) \in T_z D^s \times D^u:\ |v_1| \le \varepsilon|v_2|\}.$$

Also, define $S_\varepsilon(D^s_z) = \{(v_1,v_2) \in T_z D^s \times D^u\colon |v_2| \le \varepsilon |v_1|\}$. For $i \ge 1$, let $y_i = f^{n_i}(y)$ and $e_i = \left[(e^{k/n_i^3} - 1)|\psi^u y_i|\right]^{-1/2}$.

Since x is a quasi-transversal intersection of $W^u(p)$ and $W^s(p)$,

(3.12) there is a constant $c_7 > 0$ such that if $z_1 \in U_1 \cap f^{n_0}(D^u_{z_2})$ for $z_2 \in f^{-n_0}(U_1)$, then $T_{z_1}\left(f^{n_0}(D^u_{z_2})\right) \subset S_{c_7 h}(D^u_{z_1})$ where $h = \left(|\psi^u z_1| - |\psi^u\ c z_1|\right)^{-1/2}$.

We will show

(3.13) (a) given $A > 1$, there is an integer $N > 0$ such that for $i \ge N$, $T_{y_i} f^{n_{i+1}-n_i}\left(S_{2c_7 e_i} D^u_{y_i}\right) \subset S_{2c_7 e_{i+1}} D^u_{y_{i+1}}$ and

$m\left(T_{y_i} f^{n_{i+1}-n_i}\big|S_{2c_7 e_i} D^u_{y_i}\right) > A$.

(b) $\operatorname{diam} T f^{n_j - n_i} S_{2c_7 e_i} D^u_{y_i} \to 0$ as $j - i \to \infty$.

Here, $m(B|L) = \inf\limits_{\substack{|v|=1 \\ v \in L}} |Bv|$ where B is a linear map of a vector space containing the subset L.

Similar arguments will show that $\operatorname{diam} T f^{n_i - n_j}(L_j) \to 0$ as $j - i \to \infty$ and $m\left(T f^{n_i - n_j}\big|L_j\right) > A$ for $i,j \ge N$, some N where $L_j = \mathrm{Cl}(TM - S_{2c_7 e_j} D^u_{y_j})$. Thus, $\bigcap\limits_{j \ge N} T f^{n_N - n_j}(L_j)$ is a single s-dimensional subspace $E^s_{y_N}$. Also, $|T f^{n_j}|E^s_{y_N}| \to 0$ exponentially as

$j \to \infty$. Further, if $v \in T_{y_N} M - E^s_{y_N}$, then for j large, $T f^{n_j}(v) \in S_{2c_7 e_j} D^u_{y_j}$ which means that $|T f^n(v)| \to \infty$ as $n \to \infty$. Thus $E^s_{y_N} = \{v \in T_{y_N} M: \ |T f^n(v)| \to 0 \text{ as } n \to \infty\}$. One may take $E^s_y = T f^{-n_N}(E^s_{y_N})$ for (3.9). If Σ is a C^r u-disk through y transverse to E^s_y, then $T f^{n_j}(T_y \Sigma) \subset S_{2c_7 e_j} D^u_{y_j}$ for large j. Increasing j will make $f^{n_j - n_0}(\Sigma)$ contain disks C^r near subdisks of D^u. Moreover, these disks will become large enough so that their images by f^{n_0} will meet $\hat{W}^s(p)$ transversely. Thus, we only need to prove (3.13).

For $i \geq N_0$, choose product disks $D_{n_i y_i}$, $E_{n_i y_i}$ as above. Then the properties of $D_{n_i y_i}$ and $E_{n_i y_i}$, the assumption of (3.9), and (3.12) imply that for large i,

$$\rho_u\left(T_{y_i}(f^{n_i - n_{i-1}} D^u_{y_{i-1}})\right) \geq c_8 \left[\left(e^{k/n_i^3} - 1\right) |\psi^u y_i|\right]^{1/2}$$

where ρ_u is defined in the obvious way. Thus $T_{y_i}\left(f^{n_i - n_{i-1}} D^u_{y_{i-1}}\right) \subset S_{h_i} D^u_{y_i}$ where $h_i = c_8^{-1}\left[\left(e^{k/n_i^3} - 1\right) |\psi^u y_i|\right]^{-1/2}$. Note that $|\psi^u y_i| > c_9 \lambda_1^{n_0 - n_{i-1} - n_i}$ and that $T f^{n_{i+1} - n_i - n_0}$ increases the u-slope of any vector $(v_1, v_2) \in T D^s \times D^u$ by a factor of $c_{10} \lambda_1^{n_{i+1} - n_i - n_0} |\mu_1|^{n_0 - n_i - n_{i+1}}$. Now the last expression dominates h_i exponentially. Thus, the sector $S_{h_i}(D^u_{y_i})$ is exponentially decreased by $f^{n_{i+1} - n_i - n_0}$ as $i \to \infty$; i.e.

$$\operatorname{diam}\left(\{v \in S_{h_i} D^u_{y_i} : |v| = 1\}\right) \le c_{11} \nu^{n_{i+1}-n_i-n_0} \text{ with } \nu < 1 \text{ as } i \to \infty.$$

From this, (3.13) follows easily, so the proof of Part 2 is completed.

Remark: Under the assumptions of (3.9), it can be shown that $W^s(o(x))$ is a union of C^r injectively immersed submanifolds each diffeomorphic to $\mathbb{R}^s$. Moreover, $W^s(\overline{o(x)}) = \overline{W^s(p)}$ and $W^s(\overline{o(x)})$ is locally the product of an s-disk and a Cantor set. However, if $y \in W^s(\overline{o(x)}) - W^s(p)$, then $W^s(y)$ is not a manifold. It is also only locally the product of a Cantor set and an s-disk. Nevertheless, we do have a clear picture of the total orbit structure of f. When the assumptions of (3.9) no longer hold, the structure of $W^s(\overline{o(x)})$ is more complex, and it is not yet well understood.

Completion of the proof of Theorem (3.1). If the arc ξ satisfies the residual set of conditions necessary for the conclusions of Lemmas (3.2), (3.3), and (3.4) to hold, so does any nearby arc η. But, (2) and (3) in the proof of Lemma (3.4) imply that $L^-(\eta_{b_0})$ will be finite for any such η, thus completing the proof of Theorem (3.1).

Our second goal in this section is to remove the asymmetry of the assumption that either $L^-(\xi_{b_0})$ or $L^+(\xi_{b_0})$ is finite. Notice that as a consequence of [18] and the proof of Theorem (3.1) here, we have that, generically, if either $L^-(\xi_{b_0})$ or $L^+(\xi_{b_0})$ is finite, then $L(\xi_{b_0}) - P(\xi_{b_0})$ has at most one orbit. Thus $L(\xi_{b_0})$ has a finite number of orbits. The converse is also true.

(3.14) Theorem. There is a residual set $\mathcal{B} \subset \Phi^{k,r}$, $k \ge 1$, $r \ge 5$, such that if $\xi \in \mathcal{B}$, $\xi_0 \in MS$, and $L(\xi_{b_0})$ consists of only finitely many orbits, then either $L^-(\xi_{b_0})$ or $L^+(\xi_{b_0})$ is finite.

Proof. As above, let $\xi_{b_0} = f$. By (2.2) and (2.4) in [18], we may assume that $P(f)$ is finite and that one of the following situations arises.

(1) $P(f)$ has one quasi-hyperbolic orbit, and all stable and unstable manifolds of periodic orbits meet transversely.

(2) $P(f)$ is hyperbolic, and there is exactly one orbit of quasi-transversal intersections of stable and unstable manifolds of $P(f)$, the other intersections being transverse.

Consider the case when $L^-(f) \not\subset P(f)$, and let $y_1 \in L_\alpha(f) - P(f)$. Suppose $y_1 \in \alpha(y)$. Then $y \notin W^u(P(f))$ since $y_1 \notin P(f)$. Define the relation $<$ on M by $x < z$ if and only if $x \in \alpha(z)$. This is clearly transitive. Also, $x < z$ and $z < x$ imply that $o(x) = o(z) \subset P(f)$, for otherwise $\alpha(z)$ would be uncountable. Similarly, all minimal sets of f are orbits in $P(f)$ since minimal sets are either finite or uncountable. We claim

(3) there are a hyperbolic periodic point $x_1 \in \alpha(y)$ and an orbit $o(x) \subset \hat{W}^u(o(x_1)) \cap \hat{W}^s(o(x_1)) \cap \alpha(y)$.

(4) $L^+(f) = P(f)$.

Assume $L(f)$ has N orbits. Then any sequence $\{x_1, \ldots, x_k\}$ with $x_1 < x_2 < \ldots < x_k$ and $o(x_i) \neq o(x_j)$ for $i \neq j$ necessarily has at most $N+1$ elements. Choose a sequence $x_1 < \ldots < x_k$ of maximal length with $x_1 \in \alpha(y)$. Taking a minimal subset of $\alpha(y_1)$ we may find a point $x \in P(f)$ which is also in $\alpha(y_1)$. Then $x < y_1 < y$, so the length k of the maximal sequence above is greater than 2, and $x_1 \in P(f)$. From the local structure of quasi-hyperbolic and hyperbolic periodic points, we have $x_2 \in \hat{W}^u(o(x_1))$, for otherwise we could find another

point x_1' with $x_1' \in \hat{W}^u(o(x_1))$ and $x_1 < x_1' < x_2$. Suppose that $o(x_1)$ is quasi-hyperbolic. Then there is a point $x_2' < x_3$ in the strong stable manifold (i.e. $\partial W^s(o(x_1))$) of $o(x_1)$ with $x_2' \in o(x_1)$. Now $x_2' \notin W^u(o(x_1))$ because this would contradict the fact that $W^u(o(x_1))$ meets $W^s(o(x_1))$ transversely. Choose $x_1' \in P(f)$ with $x_1' < x_2'$. Since the sequence $x_1' < x_2' < x_3' < \ldots < x_k'$ also has maximal length we have $x_2' \in \hat{W}^u(o(x_1'))$.

Using this new sequence of maximal length we may assume $x_1 < x_2 < \ldots < x_k$ chosen such that x_1 is a hyperbolic periodic point and $x_2 \in \hat{W}^u(o(x_1))$. Choose a point $x_2'' \in \hat{W}^s(o(x_1))$ such that $x_2'' < x_3$. If $x_2'' \in \hat{W}^u(o(x_1))$, (3) is established. If not, reasoning as above, we may find another hyperbolic periodic point x_1'' with $x_1'' < x_2''$. Continuing in this manner, and using the fact that $L_\alpha(f)$ has finitely many orbits, we either establish (3) or we obtain sequences $\{p_1, \ldots, p_j\} \subset P(f)$ and $\{z_1, \ldots, z_{j-1}\} \subset M$ such that

(5) $o(p_1) = o(p_j)$, $z_i \in \hat{W}^u(o(p_i)) \cap \hat{W}^s(o(p_{i+1}))$,

$o(p_i) \neq o(p_k)$ for $1 \leq i < \ell < j$.

(6) $\{p_1, \ldots, p_j\} \cup \{z_1, \ldots, z_{j-1}\} \subset \alpha(y)$.

We first note that no p_i can be quasi-hyperbolic for if p_i were, the above construction would give $z_{i-1} \in \partial W^s(o(p_i))$. Also, in this case, all the manifolds would meet, so one would get transversal homoclinic points for f which is impossible. Thus all the p_i's are hyperbolic, and so some z_i must be a quasi-transversal intersection of $W^u(o(p_i))$ and $\hat{W}^s(o(p_{i+1}))$. Moreover, all other z_i's are points of transversal inter-

sections. Assume z_1 is the quasi-transversal intersection. If all the $o(p_i)$'s are the same (i.e. $(o(p_1), \ldots, o(p_j))$ is a 1-cycle), then (3) is established. So, we may assume we have a j-cycle, $j > 1$. The proof of (4.7) in [18] applies here, so we conclude that the weakest expanding eigenvalue λ_1 of $T_{p_2} f$ is real and positive and so is the weakest contracting eigenvalue μ_1 of $T_{p_1} f$. Also, one may find a neighborhood U_2 of $o(p_2)$ so that $\partial_1 W^u(o(p_1)) \cap W^u(o(p_2)) \cap U_2$ is in a finite union of half spaces away from $W^s(\bigcup_{i \neq 2} o(p_i))$. A similar fact holds for $\partial_1 W^s(o(p_2)) \cap W^s(o(p_1))$. But then there is a small neighborhood V of z_1 such that if $f^{n_1}(y)$ and $f^{n_2}(y)$ are in V with $n_1 < n_2$, then $f^{n_1}(y)$ is near $W^s(\bigcup_{i \neq 2} o(p_i))$ and $f^{n_2}(y)$ is near $W^u(\bigcup_{1<i<j} o(p_i))$. That is, the analog of (4.7) in [18] holds here also. From the geometry of this situation it follows that z_1 cannot be in $L_\alpha(f)$ which is a contradiction. Thus (3) is established.

Let x, x_1 be as in (3). Since $P(f)$ is finite, the orbit $o(x)$ must consist of quasi-transversal intersections.

Assume now that (4) is false so that $L_\omega(f) \supsetneq P(f)$. Repeating the above argument with f^{-1} in place of f would give a hyperbolic periodic point q and an orbit $o(z) \subset \hat{W}^u(o(q)) \cap \hat{W}^s(o(q)) \cap L_\omega(f)$. Since f has at most one orbit of quasi-transversal intersections, it follows that $o(x_1) = o(q)$ and $o(x) = o(z) \subset L_\alpha(f) \cap L_\omega(f)$. Assume $f^n(x_1) = x_1$. Let $\lambda_1(\mu_1)$ be the weakest expanding (contracting) eigenvalue of $T_{x_1} f^n$. We may assume λ_1 and μ_1 have multiplicity one

and $|\mu_1||\lambda_1| \neq 1$. If $|\mu_1||\lambda_1| < 1$, there is a neighborhood V of z such that if $w \in V - o(z)$, then $\alpha(w) \cap V = \emptyset$. But this fact and the assumption that $L(f)$ has finitely many orbits lead to a contradiction as in the proof of Part 1 of Lemma (3.4). Similarly, $|\mu_1||\lambda_1| > 1$ is impossible by repeating the argument for f^{-1}. This proves (4) and Theorem (3.14).

§4. In this and the next section we will study the structure of ξ_t for $t > b_0$ and near b_0 where

(4.1) $L^-(\xi_{b_0})$ is finite, hyperbolic, and has an equidimensional cycle.

Let $\mathcal{A}^{k,r}$ denote the set of arcs $\xi \in \Phi^{k,r}$ such that $\xi_0 \in MS$ and ξ satisfies (4.1). Our main goal is to prove the following. For $\delta > 0$, let $U_\delta = [b_0, b_0 + \delta)$.

<u>(4.2) Theorem.</u> There is a residual subset $\mathcal{B} \subset \mathcal{A}^{k,r}$, $k \geq 1$, $r \geq 2$, such that if $\xi \in \mathcal{B}$, the following facts are true. Given $\varepsilon > 0$, there are $\delta > 0$ and an open subset $B_\delta \subset U_\delta$ such that

(a) the Lebesgue measure of B_δ is less than $\varepsilon\delta$.

(b) if $t \in U_\delta - B_\delta$, then $\xi_t \in AS$ and $\Omega(\xi_t)$ is infinite and zero-dimensional.

It turns out also that for $t \in U_\delta - B_\delta$, the attractors of ξ_t are all near those of ξ_0. Moreover, b_0 is a limit point of $U_\delta - B_\delta$, and as t approaches b_0 in $U_\delta - B_\delta$, the diffeomorphisms assume infinitely many different topological conjugacy types.

To begin the proof of the theorem, let us first observe that we may assume $k = r = \infty$. Indeed, let $\mathcal{A}^{k,r}_{m,n}$ be the set of ξ in $\mathcal{A}^{k,r}$ such that for $\varepsilon = \frac{1}{m}$ there are a $\delta < \frac{1}{n}$ and a set $B_\delta \subset U_\delta$ satisfying (a) and

(b). Then, since AS is open, $\mathcal{A}^{k,r}_{m,n}$ is open in $\mathcal{A}^{k,r}$ for all $m,n,k,r \geq 1$, and the theorem for $k = r = \infty$ would imply that $\mathcal{A}^{k,r}_{m,n}$ is dense in $\mathcal{A}^{k,r}$ for $m,n,k \geq 1$, $r \geq 2$. Thus, the theorem would follow with $\mathcal{B} = \bigcap_{\substack{m\geq 1\\ n\geq 1}} \mathcal{A}^{k,r}_{m,n}$.

Now let $\xi \in \mathcal{A}^{\infty,\infty}$ and let $f = \xi_{b_0}$. We first consider the case in which there is a j-cycle, $j > 1$. Then there are periodic points p_1, p_2 in a cycle such that $o(p_1) \neq o(p_2)$ and $W^u(p_2) \cap W^s(p_1)$ is a single orbit $o(x)$ of quasi-transversal intersections. Because all other intersections of stable and unstable manifolds are transverse, we conclude that all cycles are equidimensional.

Let $o(p_1) = o(q_1), o(q_2), \ldots, o(q_\nu) = o(p_2)$ be the distinct periodic orbits in the cycles containing $o(p_1)$ and $o(p_2)$. For simplicity of notation, we assume all the q_i's are fixed points of f. The proof without this assumption is similar.

Let $\Lambda_1 = o(p_2) \cup \left[\bigcup_{i=1}^{\nu-1} W^u(q_i) \cap \bigcup_{i=1}^{\nu} W^s(q_i)\right]$, and let $\Lambda_2 = \{q_1, \ldots, q_\nu\}$. Since points of Λ_1 are transverse intersections of stable and unstable manifolds of elements in Λ_2, and $\dim W^u(q_i) = \dim W^u(q_j)$ for $1 < i, j \leq \nu$, it is easy to show that Λ_1 is a hyperbolic set for f^j. Moreover, by [18, p. 335], we may assume, restricting to a residual set in $\mathcal{A}^{\infty,\infty}$, that $\Omega(f) = \Lambda_2 \cup o(x) \cup P_1$ where P_1 is a finite set of hyperbolic periodic points not meeting Λ_1.

Now let V_1 be a compact neighborhood of $\Lambda_1 \cup o(x) - \{x\}$ not meeting $\{x\} \cup P_1$ so that $L(f) \cap V_1 = \Lambda_2$. If $y \in \bigcap_{n \geq 0} f^{-n}(V_1)$, then $\omega(y) \subset V_1$, so $y \in W^s(\Lambda_1)$. Similarly, if $y \in \bigcap_{n \geq 0} f^n(V_1)$, then $\alpha(y) \subset V_1$, so $y \in W^u(\Lambda_1)$. Thus, $\bigcap_{n \in \mathbb{Z}} f^n(V_1) = \Lambda_1$.

Let V_2 be a compact neighborhood of x such that $V_2 \cap (V_1 \cup P_1) = \emptyset$.

Using filtrations as in §2, we may construct two compact neighborhoods $M_1, M_2 \subset M$ such that $f(M_i) \subset \operatorname{int} M_i$, $M_2 \subset \operatorname{int} M_1$, $V_1 \cup V_2 \subset \operatorname{int}(M_1 - M_2)$, and $\bigcap_n f^n(V_1 \cup V_2) = \Lambda_1 \cup o(x)$.

For t near b_0, there is a set P_{1t} of hyperbolic periodic points for ξ_t near P_1, and $\Omega(\xi_t)$ will be contained in $\bigcap_n \xi_t^n(V_1 \cup V_2) \cup P_{1t}$.

The proof of Theorem (4.2) will be obtained by showing that for t in an appropriate set B_δ,

(4.3) $\bigcap_n \xi_t^n(V_1 \cup V_2)$ is a zero-dimensional hyperbolic topologically transitive set for ξ_t

and

(4.4) ξ_t satisfies the transversality condition; i.e., for each $y \in M$, $W^u(y, \xi_t)$ is transverse to $W^s(y, \xi_t)$ at y.

Before proceeding to the proof of (4.3), we pause to establish a lemma which will be considered with more generality.

If $F = E_1 \oplus E_2$ is a direct sum decomposition of a vector space F with norm $|\cdot|$ and $\varepsilon > 0$ is a positive number, let $S_\varepsilon(E_1) = S_\varepsilon(E_1,E_2)$ denote the ε-sector of E_1 by E_2 which is defined by $S_\varepsilon(E_1,E_2) = \{(v_1,v_2): \ |v_2| \le \varepsilon\,|v_1| \text{ where } v_i \in E_i,\ i = 1,2\}$. If $A: F \to F$ is a linear map, $|A| = \sup_{|v|=1} |Av|$ is its norm and $m(A) = \inf_{|v|=1} |Av|$ is its minimum norm. We define $|A|S|$ and $m(A|S)$ for subsets $S \subset V$ in the obvious way. If A is an isomorphism, $m(A) = |A^{-1}|^{-1}$. Let $\Lambda_1 \subset M$ be a compact f-invariant hyperbolic set with continuous splitting $T_xM = E^s_x \oplus E^u_x$, $x \in M$, and adapted riemannian norm $|\cdot|$.

A compact neighborhood V_1 of Λ_1 will be called an <u>adapted</u> neighborhood of Λ_1 if

(4.5) $\bigcap_n f^n(V_1) = \Lambda_1$

(4.6) there are a continuous splitting $T_{V_1}M = E_1 \oplus E_2$, a constant $\lambda > 1$, and a continuous real function $\varepsilon: V_1 \to \mathbb{R}$ such that

(a) $T_x f(S_{\varepsilon x}E_{2x}) \subset S_{\varepsilon f(x)}E_{2f(x)}$

and

$m(T_x f|S_{\varepsilon x}E_{2x}) \ge \lambda,\ x \in V_1 \cap f^{-1}(V_1)$

(b) $T_x f^{-1}(T_xM - S_{\varepsilon x}E_{2x}) \subset T_{f^{-1}(x)}M - S_{\varepsilon f^{-1}(x)}E_{2f^{-1}(x)}$

and

$m(T_x f^{-1}|T_xM - S_{\varepsilon x}E_{2x}) \ge \lambda$ for $x \in V_1 \cap f(V_1)$.

It is clear that the splitting $E_1 \oplus E_2$ for an adapted neighborhood V_1 of Λ_1 is an almost hyperbolic splitting for V_1 as defined in [18]. The only known practical way of showing a set is hyperbolic is to find an almost hyperbolic splitting on a neighborhood of it.

Now suppose V_1 is an adapted neighborhood of Λ_1 and V_2 is a compact subset of M with $V_2 \cap V_1 = \emptyset$, but $f V_2 \cap V_1 \neq \emptyset$ and $f^{-1} V_2 \cap V_1 \neq \emptyset$. Assuming $\bigcap_n f^n(V_1 \cup V_2) \neq \emptyset$, we want to know when this set is hyperbolic. With the present applications in mind, we assume $V_2 \cap f(V_2) = V_2 \cap f^2(V_2) = V_2 \cap f^{-1}(V_2) = V_2 \cap f^{-2}(V_2) = \emptyset$ although this is not actually necessary.

<u>(4.7) Lemma.</u> Suppose there is a compact subset $V_2' \subset V_2$ such that $V_2 \cap \bigcap_n f^n(V_1 \cup V_2) \subset V_2'$, and the splitting $E_1 \oplus E_2$ and function ε may be extended to V_2' so that there are constants $\lambda_1 > 1$, and an integer $N > 0$ satisfying the following. For each $x \in V_2'$ there are integers $-N \leq \ell(x) < 0 < k(x) \leq N$ such that

(a) $T_x f^{kx}(S_{\varepsilon x} E_{2x}) \subsetneq S_{\varepsilon f^{kx}(x)} E_{2f^{kx}(x)}$,

$$f^{kx}(x) \in V_1 \cap f(V_1) \cap f^{-1}(V_1) \quad \text{and} \quad m\left(T_x f^{kx} | S_{\varepsilon x} E_{2x}\right) \geq \lambda_1$$

(b) $T_x f^{\ell x}(T_x M - S_{\varepsilon x} E_{2x}) \subsetneq T_{f^{\ell x}(x)} M - S_{\varepsilon f^{\ell x}(x)} E_{2f^{\ell x}(x)}$,

$$f^{\ell x}(x) \in V_1 \cap f(V_1) \cap f^{-1}(V_1) \text{ and}$$

$$m\left(T_x f^{\ell x} | T_x M - S_{\varepsilon x} E_{2x}\right) \geq \lambda_1.$$

Then $\bigcap_n f^n(V_1 \cup V_2)$ is a hyperbolic set.

<u>Remark:</u> Without further hypotheses, the proper containment in (4.7a) and (4.7b) is necessary for the lemma to be true. The essential fact which is needed is that for large n, if $y \in V_2' \cap f^{-j}(V_2') \cap f^j(V_2')$, for $j \geq n$ and $f^k(y) \notin V_2'$ for $0 < |k| < j$, then $m\left(T_y f^j | S_{\varepsilon y} E_{2y}\right) > \lambda_2 > 1$ and $m\left(T_y f^{-j} | T_y M - S_{\varepsilon y} E_{2y}\right) > \lambda_2 > 1$ where λ_2 is independent of y and n. The proper containment assures this.

We defer the proof of Lemma (4.7) to the next section.

Now beginning the proof of (4.3), let us consider some more detailed structure of f. All additional assumptions may require the restriction to residual sets in $\mathcal{A}^{\infty,\infty}$, and we assume this without further mention. From [18], we may assume the weakest expanding eigenvalue λ of $T_{p_1} f$ and the weakest contracting eigenvalue μ of $T_{p_2} f$ are each real and positive with multiplicity one. Also, using Sternberg [37], we may assume that f is linear on its stable and unstable manifolds for p_1 and p_2 via C^∞ coordinates near p_1 and p_2. Thus there are neighborhoods U_1 of p_1, U_2 of p_2 in M and C^∞ diffeomorphisms $\phi_1: U_1 \to \mathbb{R}^m$ and $\phi_2: U_2 \to \mathbb{R}^m$ satisfying the following. Let $w = (u_1, \ldots, u_s)$, $v = (v_1, \ldots, v_u)$ be coordinates $\mathbb{R}^s$ and $\mathbb{R}^u$ with $u + s = m = \dim M$. Let $D^s \subset \mathbb{R}^s$ and $D^u \subset \mathbb{R}^u$ be the closed unit balls. Let

$\bar{w} = (u_2, \ldots, u_s)$, $\bar{v} = (v_2, \ldots, v_u)$. Then $\phi_1 f \phi_1^{-1}(0,v) = (0,\lambda v_1, B_1\bar{v})$, $v \in D^u$, and $\phi_1 f \phi_1^{-1}(w,0) = (A_1 w, 0)$, $w \in D^s$, where A_1 and B_1 are linear isomorphisms with $|A_1| < 1$ and $|B_1^{-1}|^{-1} = m(B_1) > \lambda > 1$. Also, $\phi_2 f \phi_2^{-1}(0,v) = (0, B_2 v)$, $v \in D^u$, and $\phi_2 f \phi_2^{-1}(u_1,\bar{u},0) = (\mu u_1, A_2 \bar{u}, 0)$, $w \in D^s$, where A_2 and B_2 are linear isomorphisms with $|A_2| < \mu < 1$ and $m(B_2) > 1$.

<u>Remark:</u> We actually could assume that $f|U_1$ and $f|U_2$ are linearizable, but this isn't necessary. On the other hand, we could continue with the proof if we were to assume only that $f^{-1}|W^u(p_1)$ and $f|W^s(p_2)$ are linearizable near p_1 and p_2, respectively, and we only need C^2 linearizations. These assumptions would guarantee that we may find C^2 invariant curves tangent to the eigenspaces of λ at p_1 and μ at p_2. Our present proofs require this fact very strongly.

We may choose U_1 and U_2 as above so that $U_1 \cap U_2 = \emptyset$, $x \notin U_1 \cup U_2$, $f^n(x) \in U_1$ for $n \geq 1$, and $f^n(x) \in U_2$ for $n \leq -1$. For $i = 1,2$, let $D_i^u = \phi_i^{-1}(0 \times D^u)$, and let $D_i^s = \phi_i^{-1}(D^s \times 0)$. We identify $D_1^s \times D_1^u$ with U_1 and $D_2^s \times D_2^u$ with U_2. Let $H_1 = \phi_1^{-1}(w = 0, \bar{v} = 0)$, $H_2 = \phi_2^{-1}(\bar{w} = 0, v = 0)$, $J_1 = \phi_1^{-1}(w = 0, v_1 = 0)$, and $J_2 = \phi_2^{-1}(u_1 = 0, v = 0)$. Then H_i, J_i are f-invariant for $i = 1,2$. Let $D_{1+}^u = \phi_1^{-1}(v_1 \geq 0, w = 0)$, $D_{1-}^u = \phi_1^{-1}(v_1 \leq 0, w = 0)$, $D_{2+}^s = \phi_2^{-1}(u_1 \geq 0, v = 0)$, $D_{2-}^s = \phi_2^{-1}(u_1 \leq 0, v = 0)$.

In view of [18], we may assume that $\Lambda_1 \cap D_1^u \subset D_{1+}^u$ and $\Lambda_1 \cap D_2^s \subset D_{2+}^s$.

We have the following figure.

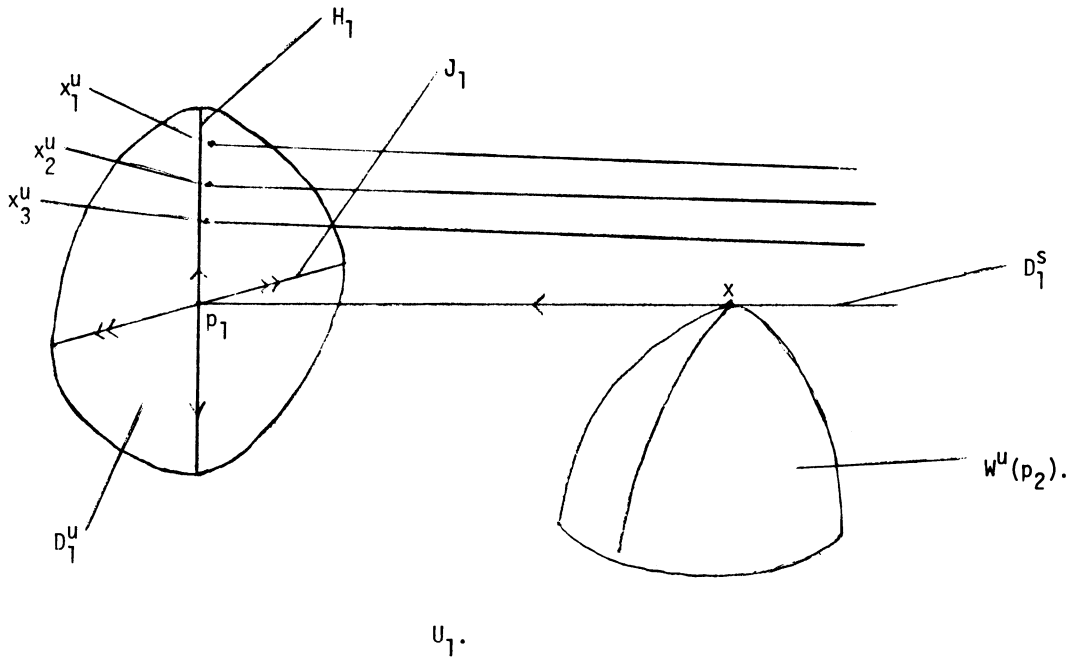
H_1
J_1
x_1^u
x_2^u
x_3^u
p_1
x
D_1^s
$W^u(p_2)$.
D_1^u
U_1.

Figure 4.1.

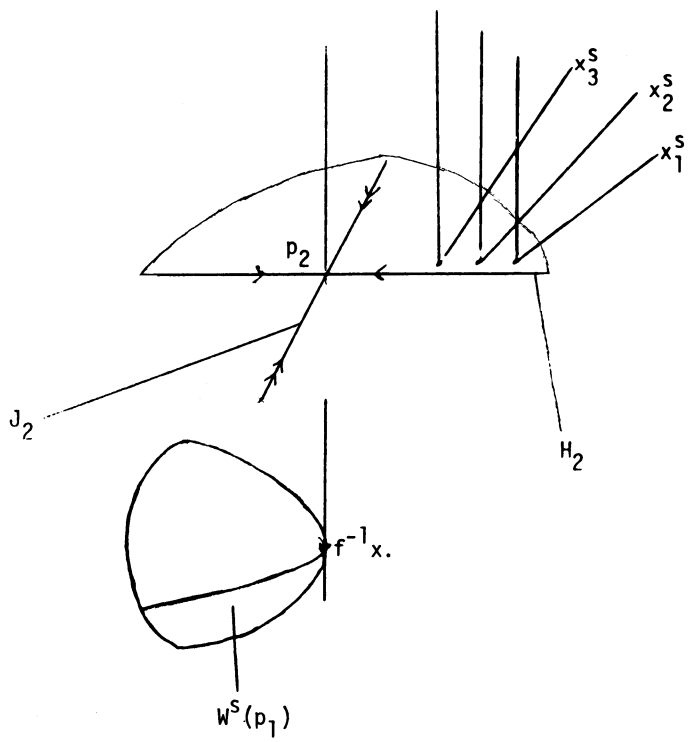
x_3^s
x_2^s
x_1^s
p_2
J_2
H_2
$f^{-1}x$.
$W^s(p_1)$

In the first picture we represent the s-disk D_1^s as a line and in the second picture f^{-1} of a part of it is a two-dimensional surface. Also, the x_i^u are points in $\Lambda_1 \cap D_{1+}^u$ and the x_i^s are points in $\Lambda_1 \cap D_{2+}^s$. We may assume that $\Lambda_1 \cap D_{1+}^u$ is in a very small sector about H_1 in D_1^u and $\Lambda_2 \cap D_{2+}^s$ is in a small sector about H_2 in D_2^s. Also, the λ-lemma [20] implies that if U_1 and U_2 are chosen narrow enough, each component of $W^s(\Lambda_1) \cap U_1$ is an s-disk C^2 near D_1^s and each component of $W^u(\Lambda_1) \cap U_2$ is a u-disk C^2 near D_2^u.

For n large, $\bigcap_{0 \le j \le n} f^j(V_1 \cup V_2) \cap V_2$ is near $W^u(\Lambda_1) \cap V_2$, and $\bigcap_{0 \le j \le n} f^{-j}(V_1 \cup V_2) \cap V_2$ is near $W^s(\Lambda_1) \cap V_2$. For t near b_0, $\bigcap_n \xi_t^n(V_1) \equiv \Lambda_{1t}$ is a hyperbolic set near Λ_1. Part of the proof of (4.3) is involved with showing that, for appropriate t near b_0, the angles between $W^s(\Lambda_{1t}) \cap V_2$ and $W^u(\Lambda_{1t}) \cap V_2$ are bounded away from zero. This is not enough, however, because these sets will intersect in a countable set, and $\bigcap_n \xi_t^n(V_1 \cup V_2) \cap V_2$ will contain points off this set. We will show that for n large one may enlarge $W^s(\Lambda_1) \cap V_2$ to a set V_n^s and $W^u(\Lambda_1) \cap V_2$ to a set V_n^u for which the corresponding sets V_{nt}^s and V_{nt}^u are also defined for t near b_0 and satisfy

(a) V_{nt}^s is a union of s-disks near $W^s(\Lambda_1) \cap V_2$, and V_{nt}^u is a union of u-disks near $W^u(\Lambda_1) \cap V_2$

(b) $\bigcap_j \xi_t^j(V_1 \cup V_2) \cap V_2 \subset V_{nt}^s \cap V_{nt}^u$

(c) for certain numbers u_1, if $t - b_0 = \mu^n u_1$, then the angles between the s-disks in V_{nt}^s and the u-disks in V_{nt}^u are bounded away from zero by a number which depends on n.

The bounds on the angles mentioned in (c) will determine the sectors which will enable us to apply Lemma (4.7) to prove (4.3).

Now we proceed to describe the sets V_n^s and V_n^u.

Let $c_1 > 0$ be a constant. For each integer $n > 0$, let Δ_1^n be a disk about x in U_1 of the form $x + c_1 \mu^{n/2} U_1$, and let Δ_2^n be a disk about $f^{-1}(x)$ in U_2 of the form $f^{-1}(x) + c_1 \mu^{n/2} U_2$. Here, the addition means vector addition in the appropriate coordinate systems. These sets look something like those in Figure (4.2).

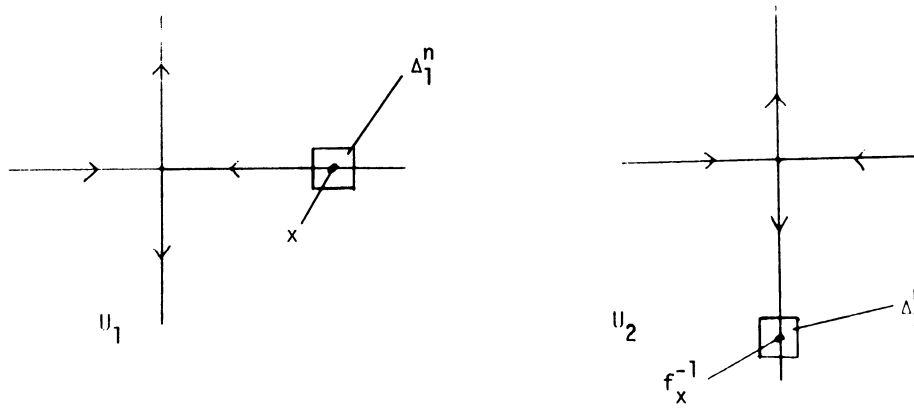

Figure 4.2.

Let π_i^u: $D_i^s \times D_i^u \to D_i^u$, π_i^s: $D_i^s \times D_i^u \to D_i^s$, π_{11}^u: $D_1^u \to H_1$, π_{21}^s: $D_2^s \to H_2$ be the natural projections, and let $\psi_{11} = \pi_{11}^u \pi_1^u$ and $\psi_{21} = \pi_{21}^s \pi_2^s$. Let d be one plus the maximal length of a sequence $p_1 = q_{i_1}, q_{i_2}, \ldots q_{i_k} = p_2$ with $W^u(q_{i_j})$ having a non-empty transverse intersection with $W^s(q_{i_{j+1}})$ for $1 \le j < k$. For a positive integer $k > 0$, let $\Delta_{1,k}^n$ denote the set of points y in $\Delta_1^n \cap \bigcap_{0 \le j \le k} f^{-j}(V_1 \cup V_2)$ such that for some $\ell \le k$, $f^{\ell}(y) \notin V_1$, and if $\ell(y)$ is the least such ℓ, then $f^{\ell y-1}(y) \in \Delta_2^n$. Similarly, let $\Delta_{2,k}^n$ be the set of points y in $\Delta_2^n \cap \bigcap_{0 \le j \le k} f^j(V_1 \cup V_2)$ such that for some $\ell \le k$, $f^{-\ell}(y) \notin V_1$, and if $\ell(y)$ is the least such ℓ, then $f^{-\ell(y)+1}(y) \in \Delta_1^n$

<u>(4.8) Lemma.</u> Let $K_1 > 0$ be a positive number. There are a real number $0 < \tau < 1$, an integer $N > 0$, and integral polynomials $\zeta_1(z) = \Sigma a_i z^i$, $\zeta_2(z) = \Sigma b_i z^i$ of degree d satisfying the following. For each integer $n > N$ and each integer $s > 0$, there are $\zeta_1(sn)$ intervals $X_{ni} \subset H_1$ centered at x_{ni}, $1 \le i \le \zeta_1(sn)$, and $\zeta_2(sn)$ intervals $Y_{ni} \subset H_2$ centered at y_{ni}, $1 \le i \le \zeta_2(sn)$, such that

(a) $\Delta_{1,sn}^n \cup \bigcap_{0 \le j \le sn} f^{-j}(V_1) \subset \bigcup_{1 \le i \le \zeta_1(sn)} \psi_{11}^{-1}(X_{ni})$

(b) $\Delta_{2,sn}^n \cup \bigcap_{0 \le j \le sn} f^j(V_1) \subset \bigcup_{1 \le i \le \zeta_2(sn)} \psi_{21}^{-1}(Y_{ni})$

(c) $\operatorname{diam} X_{ni} \le \tau^{\frac{n}{2}-N} |x_{ni}|$, for $|x_{ni}| > K_1 \lambda^{-sn}$ and

$\operatorname{diam} X_{ni} \le \tau^{\frac{n}{2}-N} K_1 \lambda^{-sn}$ for $|x_{ni}| \le K_1 \lambda^{-sn}$, $1 \le i \le \zeta_1(sn)$

(d) $\operatorname{diam} Y_{ni} \le \tau^{\frac{n}{2}-N} |y_{ni}|$ for $|y_{ni}| > K_1 \mu^{2n}$ and

$\operatorname{diam} Y_{ni} \le \tau^{\frac{n}{2}-N} K_1 \mu^{2n}$ for $|y_{ni}| \le K_1 \mu^{2n}$, $1 \le i \le \zeta_2(sn)$.

Let $s > 0$ be such that $\lambda^{-s} < \mu$ where we assume $\mu < \lambda^{-1}$. If $\mu \ge \lambda^{-1}$ the proof is similar.

The sets V_n^s, V_n^u above will be $V_n^s = V_2 \cap \bigcup_{1 \le i \le \zeta_1(sn)} \psi_{11}^{-1}(X_{ni})$,

$V_n^u = V_2 \cap f \bigcup_{1 \le i \le \zeta_2(sn)} \psi_{21}^{-1}(Y_{ni})$.

We will also defer the proofs of Lemmas (4.8) and (4.9) below to the next section. Of course, $|x_{ni}|$ ($|y_{ni}|$) refers to the norm in the ϕ_1 (ϕ_2) coordinates. This may be identified with x_{ni} (y_{ni}) itself.

It will follow from the proof of Lemma (4.8) and the previous definitions that all of the structures X_{ni}, Y_{ni}, λ, μ, etc., may be defined for ξ_t for t near b_0. Denote these by X_{nit}, Y_{nit}, λ_t, μ_t, etc. Moreover, all of these structures vary differentiably or continuously with t in naturally associated topologies. We record an especially important case of this as

<u>(4.9) Lemma.</u> There is a constant $K_2 > 0$ such that for $0 \le t - b_0$ small and n large,

(a) $|x_{nit} - x_{ni}| < K_2|x_{ni}|(t - b_0)$ for

$$x_{ni} \in \bigcup_{0 \le j \le sn} f^{-j}(D_1^u - f^{-1}(D_1^u))$$

(b) $|y_{nit} - y_{ni}| \le K_2|y_{ni}|(t - b_0)$ for

$$y_{ni} \in \bigcup_{0 \le j \le sn} f^{j}(D_2^s - f(D_2^s)).$$

Now given $\varepsilon > 0$, we will define the sets B_δ required in the proof of (4.3).

Fix coordinates $(u_1, \ldots, u_s, v_1, \ldots, v_u)$ on $D^s \times D^u \subset \mathbb{R}^{s+u}$. Let $\overline{\pi}_1(u_1, \ldots, u_s, v_1, \ldots, v_u) = v_1$ and $\overline{\pi}_2(u_1, \ldots, u_s, v_1, \ldots, v_u) = u_1$. For each $y \in U_i$, let $D_{iy}^u = \phi_i^{-1}(0 \times D^u)$ and $D_{iy}^s = \phi_i^{-1}(D^s \times 0)$. Since x is a quasi-transversal intersection of $W^u(p_2)$ and $W^s(p_1)$, it is a non-degenerate critical point of $\psi_{11}|f(D_{2p_2}^u)$. Thus, for U_1 and U_2 small, and $y \in U_2$, the u-disk $f(D_{2y}^u)$ contains a unique critical point $c_1(y)$ of the mapping $\psi_{11}|f(D_{2y}^u)$. Similarly, for $y \in U_1$, the s-disk $f^{-1}(D_{1y}^s)$ contains a unique critical point $c_2(y)$ of the map $\psi_{21}|f^{-1}(D_{1y}^s)$.

Moreover, the maps $y \to c_1(y)$ and $z \to c_2(z)$ are both C^∞, (Actually, we only need that they are C^1.), and they are defined for t near b_0. Denote these by c_{1t} and c_{2t} respectively.

Consider the mappings $\gamma_1(t,u_1) = \overline{\pi}_1 \phi_{1t} c_{1t} \phi_{2t}^{-1}(u_1,0,0)$ and $\gamma_2(t,v_1) = \overline{\pi}_2 \phi_{2t} c_{2t} \phi_{1t}^{-1}(0, \ldots, 0, v_1, 0, \ldots, 0)$ defined for t near b_0 in I and u_1, v_1 near 0 in $\mathbb{R}$.

We may assume, by small perturbation, that $\frac{\partial\gamma_1}{\partial t}(b_0,0)$, $\frac{\partial\gamma_1}{\partial u_1}(b_0,0)$, $\frac{\partial\gamma_2}{\partial t}(b_0,0)$, and $\frac{\partial\gamma_2}{\partial v_1}(b_0,0)$ are all non-zero.

From the choice of the coordinates ϕ_1, ϕ_2, it follows that

$a_1 \equiv \frac{\partial\gamma_1}{\partial t}(b_0,0) > 0$, $a_2 \equiv \frac{\partial\gamma_2}{\partial t}(b_0,0) > 0$, $b_1 \equiv \frac{\partial\gamma_1}{\partial u_1}(b_0,0) < 0$, and

$b_2 \equiv \frac{\partial\gamma_2}{\partial v_1}(b_0,0) < 0$. ($a_1$, a_2 not being zero is just the statement that ξ is transverse to the set Q in Theorem (2.2) of [18] at b_0.)

Thus, for t near b_0, we have

$$(4.10)\quad \gamma_1(t,u_1) = a_1(t-b_0) + b_1 u_1 + \ldots$$

$$\gamma_2(t,v_1) = a_2(t-b_0) + b_2 v_1 + \ldots$$

where the dots refer to higher order terms.

Recall we are assuming $0 < \mu < \lambda^{-1} < 1$ and $s > 0$ is such that

$$(4.11)\quad \lambda^{-s} < \mu.$$

Let $\varepsilon > 0$ be given. Let $d_1 > 0$ be half the length of H_2. Choose $\delta_1 = (1-\mu)\,\varepsilon\, d_1$. Given K_1 as in Lemma (4.8), and K_2 as in Lemma (4.9), choose $K_3 > 0$ small enough so that

$$(4.12)\quad (a)\quad \sum_{m\geq 1} \frac{\left(\zeta_1(sm)\cdot\zeta_2(sm)\right) 4 K_2 K_3 d_1}{m^{2d+2}} < \frac{\delta_1}{4}$$

$$(b)\quad \sum_{m\geq 1} \left(\zeta_1(sm)\cdot\zeta_2(sm)\right) 2 K_1 K_3 \frac{\lambda^{-sm}}{a_1\,\mu^m} < \frac{\delta_1}{4}$$

$$\text{(c)} \quad \sum_{m \geq 1} \left(\zeta_1(sm) \cdot \zeta_2(sm)\right) \frac{2 K_1 K_3}{a_2} \mu^m < \frac{\delta_1}{4}.$$

Note that (a) and (c) are possible since ζ_1 and ζ_2 are polynomials of degree d, and (b) is possible since $\lambda^{-s} < \mu$.

Let $\delta = \mu^{n_0} d_1$. For any $t \in U_\delta$, we may write $t - b_0 = \mu^n u_1$ where $u_1 \in \phi_2\left(H_2 - f(H_2)\right)$ and $n \geq n_0$.

Define B_δ to be the set of points t in U_δ such that for some $n \geq n_0$ and some $1 \leq i \leq \zeta_1(sn)$, $1 \leq j \leq \zeta_2(sn)$, we have

$$(4.13) \quad t - b_0 = \mu^n u_1 \quad \text{with } u_1 \in \phi_2\left(H_2 - f(H_2)\right)$$

and, at least one of the following four conditions holds.

$$(4.14) \quad \text{(a)} \quad |a_1(t - b_0) + b_1 y_{nj} - x_{ni}| < \frac{K_2 K_3 |x_{ni}|}{n^{2d+2}}$$

$$\text{if} \quad K_1 \lambda^{-sn} < |x_{ni}| < 2 a_1 \mu^n d_1$$

$$\text{(b)} \quad |a_1(t - b_0) + b_1 y_{nj} - x_{ni}| < K_1 K_3 \lambda^{-sn}$$

$$\text{if} \quad |x_{ni}| \leq K_1 \lambda^{-sn}$$

$$\text{(c)} \quad |a_2(t - b_0) + b_2 x_{ni} - y_{nj}| < \frac{K_2 K_3}{n^{2d+2}} |y_{nj}|$$

$$\text{if} \quad K_1 \mu^{2n} < |y_{nj}| < 2 a_2 \mu^n d_1$$

$$\text{(d)} \quad |a_2(t - b_0) + b_2 x_{ni} - y_{nj}| < K_1 K_3 \mu^{2n}$$

$$\text{if} \quad |y_{nj}| \leq K_1 \mu^{2n}.$$

We will prove that for n_0 large

(4.15) if $n \geq n_0$ and $t \in U_\delta - B_\delta$, then $\Lambda_t = \bigcap_n \xi_t^n(V_1 \cup V_2)$ is hyperbolic for ξ_t.

First, we show the measure of B_δ is less than $\varepsilon\,\delta$.

It t satisfies (4.13) and (4.14a), then

$$|a_1 \mu^n u_1 + b_1 y_{nj} - x_{ni}| < \frac{K_2 K_3 |x_{ni}|}{n^{2d+2}}$$

or

$$\left|u_1 + \frac{b_1 y_{nj}}{a_1 \mu^n} - \frac{x_{ni}}{a_1 \mu^n}\right| < \frac{K_2 K_3 |x_{ni}|}{a_1 \mu^n n^{2d+2}} < \frac{2 K_2 K_3 d_1}{n^{2d+2}}.$$

So u_1 is in an interval of length $\frac{4 K_2 K_3 d_1}{n^{2d+2}}$ around $\frac{x_{ni}}{a_1 \mu^n} - \frac{b_1 y_{nj}}{a_1 \mu^n}$, and there are at most $\zeta_1(sn) \cdot \zeta_2(sn)$ such points. The set of all such u_1 has measure less than

$$\sum_{n \geq 1} \frac{\left(\zeta_1(sn) \cdot \zeta_2(sn)\right) 4 K_2 K_3 d_1}{n^{2d+2}} < \frac{\delta_1}{4}$$

by (4.12a).

Similarly, all u_1 for which t satisfies (4.13) and (4.14b) have measure less than $\frac{\delta_1}{4}$ by (4.12b), and all such u_1 for which t satisfies (4.13) and (4.14c) or (4.14d), have measure less than $\frac{\delta_1}{2}$. Thus, the set of $u_1 \in \phi_2\left(H_2 - f(H_2)\right)$ for which t satisfies (4.13) and (4.14) for some $n \geq n_0$ has measure less than δ_1. Hence the measure of B_δ is less than

$$\delta_1 \sum_{n \geq n_0} \mu^n = \frac{\delta_1 \mu^{n_0}}{1 - \mu} = \mu^{n_0} \varepsilon d_1 = \varepsilon\,\delta.$$

Now we proceed to show that Λ_t is hyperbolic if $t \notin B_\delta$ with δ small—that is, if $t - b_0 = \mu^n u_1$ where $u_1 \in \phi_2(H_2 - f(H_2))$, n is large, and t does not satisfy (4.14). This will prove (4.15).

We wish to apply Lemma (4.7). First note that the neighborhoods U_1, U_2 may be chosen so that they are contained in the adapted neighborhood V_1 of Λ_1 and the splitting $E_1 \oplus E_2\big|_{U_1}$ equals $TD_1^s \oplus TD_1^u$ while $E_1 \oplus E_2\big|_{U_2} = TD_2^s \oplus TD_2^u$. Let $\varepsilon = \varepsilon(y)$, $y \in V_1$, be as in Lemma (4.7).

Recall $V_{nt}^s = V_2 \cap \bigcup \psi_{11t}^{-1}(X_{nit})$, $V_{nt}^u = V_2 \cap \xi_t \bigcup \psi_{21t}^{-1}(Y_{njt})$.

We begin by obtaining lower bounds on the angles between s-disks in V_{nt}^s and u-disks in $\xi_t(V_{nt}^u)$ at points in $V_{nt}^s \cap V_{nt}^u$. The bounds at points in $\psi_{11t}^{-1}(X_{nit})$ and $\xi_t(\psi_{21t}^{-1}(Y_{njt}))$ will depend on n, i, and j. They will be used to define sectors on $V_{nt}^s \cap V_{nt}^u$ so that Lemma (4.7) may be applied with $V_2' = V_{nt}^u \cap V_{nt}^s$.

We first claim

(4.16) there is a constant $K_4 > 0$ such that if n is large and $t - b_0 = \mu^n u_1$ does not satisfy (4.14), then for all $1 \le i \le \zeta_1(sn)$ and $1 \le j \le \zeta_2(sn)$ we have

(a) $$\operatorname{dist}\left(\psi_{11t}^{-1}(X_{nit}),\ c_{1t}(\psi_{21t}^{-1}(Y_{njt}))\right) > K_4 \frac{|x_{nit}|}{n^{2d+2}}$$

for $|x_{nit}| > 2K_1 \lambda_t^{-sn}$

(b) $\operatorname{dist}\left(\psi_{11t}^{-1}(X_{nit}),\ c_{1t}\left(\psi_{21t}^{-1}(Y_{njt})\right)\right) > K_4\,\lambda_t^{-sn}$

for $|x_{nit}| \le 2K_1\,\lambda_t^{-sn}$

(c) $\operatorname{dist}\left(\psi_{21t}^{-1}(Y_{njt}),\ c_{2t}\left(\psi_{11t}^{-1}(X_{nit})\right)\right) > K_4\,\dfrac{|y_{njt}|}{n^{2d+2}}$

for $|y_{njt}| > 2K_1\,\mu_t^{2n}$

(d) $\operatorname{dist}\left(\psi_{21t}^{-1}(Y_{njt}),\ c_{2t}\left(\psi_{11t}^{-1}(X_{nit})\right)\right) > K_4\,\mu_t^{2n}$

for $|y_{njt}| \le 2K_1\,\mu_t^{2n}$.

Let us assume for the moment that (4.16) has been proved. Then since at the tangencies of $\xi_t(D^u_{2ty})$ and D^s_{1tw}, $y \in U_2$, $w \in U_1$, there are curves γ_y in $\xi_t(D^u_{2ty})$ for which $\psi_{11t}\gamma_y$ has a non-zero second derivative at $c_{1t}(y)$, we conclude

(4.17) there is a constant $K_5 > 0$ such that for

$y \in \psi_{11t}^{-1}(X_{nit}) \cap \xi_t\psi_{21t}^{-1}(Y_{njt})$, $y_1 = \xi_t^{-1}(y)$, the angle

between D^s_{1ty} and $\xi_t D^u_{2ty_1}$ is greater than

(a) $K_5\left(\dfrac{|x_{nit}|}{n^{2d+2}}\right)^{1/2}$, for $|x_{nit}| > 2K_1\,\lambda_t^{-sn}$

and greater than

(b) $K_5\left(\lambda_t^{-sn}\right)^{1/2}$ for $|x_{nit}| \le 2K_1\,\lambda_t^{-sn}$.

Also, the angle between $\xi_t^{-1}D^s_{1ty}$ and $D^u_{2ty_1}$ is greater than

$$K_5 \left(\frac{|y_{njt}|}{n^{2d+2}} \right)^{1/2} \quad \text{for} \quad |y_{njt}| > 2 K_1 \mu_t^{2n}$$

and greater than

$$K_5 \left(\mu_t^{2n} \right)^{1/2} \quad \text{for} \quad |y_{njt}| \le 2 K_1 \mu_t^{2n}.$$

Now we will define the sectors on $V_2' = V_{nt}^u \cap V_{nt}^s =$

$$\bigcup_{1 \le i \le \zeta_1(sn)} \psi_{11t}^{-1}(X_{nit}) \cap \xi_t \left(\bigcup_{1 \le j \le \zeta_2(sn)} \psi_{21t}^{-1}(Y_{njt}) \right) \quad \text{for Lemma (4.7).}$$

Define the sector $S_{e(n,i,j)}(D_{1t}^u)$ on $\psi_{11t}^{-1}(X_{nit}) \cap \xi_t \psi_{21t}^{-1}(Y_{njt})$ as follows. For $|x_{nit}| \ge |y_{njt}|$, $|x_{nit}| > 2 K_1 \lambda_t^{-sn}$, set $e(n,i,j) = 2 K_5^{-1} \left(\frac{|x_{nit}|}{n^{2d+2}} \right)^{-1/2}$. For $2 K_1 \lambda_t^{-sn} \ge |x_{nit}| \ge |y_{njt}|$, set $e(n,i,j) = 2 K_5^{-1} \left(\lambda_t^{-sn} \right)^{-1/2}$. If $|x_{nit}| < |y_{njt}|$, define $e(n,i,j)$ so that $T \xi_t^{-1} S_{e(n,i,j)} D_{1t}^u = TM - S_{r(n,i,j)} D_{2t}^s$ where $r(n,i,j) = 2 K_5^{-1} \left(\frac{|y_{njt}|}{n^{2d+2}} \right)^{-1/2}$ for $|y_{njt}| > 2 K_1 \mu_t^{2n}$ and $r(n,i,j) = 2 K_5^{-1} \left(\mu_t^{2n} \right)^{-1/2}$ for $|y_{njt}| \le 2 K_1 \mu_t^{2n}$.

Let us proceed to verify the hypotheses of Lemma (4.7).

For x_{nit}, let $\beta = \beta(x_{nit})$ be the least integer greater than zero such that $\xi_t^{\beta}(x_{nit}) \in U_{1t} - \xi_t^{-1} U_{1t}$. Then, for n large, $\xi_t^{\beta}(S_{e(n,i,j)}(D_{1t}^u)) \subsetneq S_{\varepsilon}(D_{1t}^u)$ and $\xi_t^{\beta} | S_{e(n,i,j)}(D_{1t}^u)$ is an expansion.

That is, $m(\xi_t^\beta | S_{e(n,i,j)}(D_{1t}^u)) > \lambda_1 > 1$ for some λ_1 independent of n, i, and j. Actually, λ_1 may be made arbitrarily large for large n. This holds because a vector in $S_{e(n,i,j)}(D_{1t}^u)$ will have its slope increased by approximately $c_1 \frac{\lambda_t^\beta}{\alpha^\beta}$ where $\alpha < 1$ (λ-lemma) and $|x_{nit}|$ is approximately $\lambda_t^{-\beta} c_2$ where c_1 and c_2 are constants. Similarly, if $\sigma = \sigma(y_{njt})$ is the least positive integer such that $\xi_t^{-\sigma}(y_{njt}) \in U_{2t} - \xi_t U_{2t}$, then $\xi_t^{-\sigma}(TM - S_{e(n,i,j)}(D_{1t}^u)) \subsetneq TM - S_\varepsilon(D_{2t}^u)$ and $\xi_t^{-\sigma}$ is an expansion there.

For the final hypothesis of Lemma (4.7), we show

$$(4.18) \quad V_2 \cap \Lambda_t \subset \bigcup_{1 \le i \le \zeta_1(sn)} \psi_{11t}^{-1}(X_{nit}) \cap \xi_t \bigcup_{1 \le j \le \zeta_2(sn)} \psi_{21t}^{-1}(Y_{njt}) = V_2'$$

After this, (4.15) follows from Lemma (4.7).

Since x is a quasi-transversal intersection of $W^u(p_2)$ and $W^s(p_1)$, there are $\varepsilon_1 > 0$, a constant $c_1 > 0$, and an integer $n_0 > 0$ such that if $n \ge n_0$ and $t - b_0 = \mu^n u_1$, then

$$\xi_t (\pi_{2t}^s)^{-1} D_{2+t}^s \cap (\pi_{1t}^u)^{-1} (S_{\varepsilon_1}(H_{1t}, J_{1t}) \cap D_{1+t}^u) \subset x_t + c_1 \mu_t^{n/2} U_{1t} = \Delta_{1t}^n.$$

Thus, letting $V_{nt} = \bigcap_{-n \le j \le n} \xi_t^j (V_1 \cup V_2)$, we have $V_{nt} \cap V_2 \subset \Delta_{1t}^n$ for large n. Similarly, $V_{nt} \cap \xi_t^{-1} V_2 \subset \Delta_{2t}^n$ for some (possibly larger) c_1 and n large. Now, if $y \in V_2 \cap V_{sn,t}$, either $f^j(y) \in V_1$ for $1 \le j \le sn$, or $y \in \Delta_{1,sn,t}^n$, so Lemma (4.8) gives that

$y \in \bigcup_{1 \le i \le \zeta_1(sn)} \psi_{11t}^{-1}(X_{nit})$. Analogous reasoning shows that

$\xi_t^{-1}(V_2) \cap V_{sn,t} \subset \bigcup_{1 \le i \le \zeta_2(sn)} \psi_{21t}^{-1}(Y_{nit})$ for large n. This proves (4.18).

It remains to prove (4.16).

Note that if $t - b_0 = \mu^n u_1$ does not satisfy (4.14), then for any $1 \le i \le \zeta_1(sn)$ and $1 \le j \le \zeta_2(sn)$, we have the following inequalities.

$$(4.19)\quad (a)\quad |a_1(t-b_0) - b_1 y_{nj} - x_{ni}| \ge \frac{K_2 K_3 |x_{ni}|}{n^{2d+2}}$$

$$\text{if } K_1 \lambda^{-sn} < |x_{ni}| < 2 a_1 \mu^n d_1$$

$$(b)\quad |a_1(t-b_0) + b_1 y_{nj} - x_{ni}| \ge K_1 K_3 \lambda^{-sn}$$

$$\text{if } |x_{ni}| \le K_1 \lambda^{-sn}$$

$$(c)\quad |a_2(t-b_0) + b_2 x_{ni} - y_{nj}| \ge \frac{K_2 K_3 |y_{nj}|}{n^{2d+2}}$$

$$\text{if } K_1 \mu^{2n} < |y_{nj}| < 2 a_2 \mu^n d_1$$

$$(d)\quad |a_2(t-b_0) + b_2 x_{ni} - y_{nj}| \ge K_1 K_3 \mu^{2n}$$

$$\text{if } |y_{nj}| \le K_1 \mu^{2n}.$$

Now (4.16) is a consequence of (4.19) and Lemmas (4.8) and (4.9). We will indicate the proofs of (4.16a) and (4.16b), leaving the analogous proofs of (4.16c) and (4.16d) to the reader.

First we have the geometrically evident fact that there is a constant $K > 0$ such that

(4.20) (a) $\operatorname{dist}\left(\psi_{11t}^{-1}(x_{nit}), c_{1t}(y_{njt})\right) \geq K \operatorname{dist}\left(\psi_{21t}^{-1}(y_{njt}), c_{2t}(x_{nit})\right)$

(b) $\operatorname{dist}\left(\psi_{21t}^{-1}(y_{njt}), c_{2t}(x_{nit})\right) \geq K \operatorname{dist}\left(\psi_{11t}^{-1}(x_{nit}), c_{1t}(y_{njt})\right)$

for n large and all i, j.

This is proved via the facts that

(c) if $\pi_{1t}^{u} c_{1t} y_{njt} > x_{nit}$, then $\pi_{2t}^{s} c_{2t} x_{nit} > y_{njt}$ and the distance on the left of (4.20a) may be expressed in terms of the smallest angle between $D_{1\,x_{nit}}^{s}$ and $\xi_t D_{2\,y_{njt}}^{u}$ while the distance on the right may be expressed in terms of the smallest angle between $\xi_t^{-1} D_{1\,x_{nit}}^{s}$ and $D_{2\,y_{njt}}^{u}$,

and

(d) if $\pi_{1t}^{u} c_{1t} y_{njt} < x_{nit}$, then $\pi_{2t}^{s} c_{2t} x_{nit} < y_{njt}$ and the respective distances may be obtained as the infimum of the lengths of piecewise differentiable curves joining appropriate points.

For convenience, set $e_{1,n} = |a_1(t - b_0) - b_1 y_{nj} - x_{ni}|$ and $e_{2,n} = |a_2(t - b_0) - b_2 x_{ni} - y_{nj}|$. From Lemma (4.9a) and the differentiable dependence of λ_t on t, we see that to establish (4.16a) and (4.16b), it suffices to show

(4.21) $\operatorname{dist}\left(\psi_{11t}^{-1}(X_{nit}), c_{1t}\left(\psi_{21t}^{-1}(Y_{njt})\right)\right) > \dfrac{e_{1,n}}{3}$

for large n and all i, j.

Also, since

$$\text{dist}\left(\psi_{11t}^{-1}(X_{nit}),\ c_{1t}\left(\psi_{21t}^{-1}(Y_{njt})\right)\right) = \text{dist}\left(\psi_{11t}^{-1}(X_{nit}),\ c_{1t}(Y_{njt})\right)$$

$$\geq \text{dist}\left(\psi_{11t}^{-1}(x_{nit}),\ c_{1t}(Y_{njt})\right) - \text{diam}\left(\psi_{11t}^{-1}(X_{nit})\right)$$

$$\geq \text{dist}\left(\psi_{11t}^{-1}(x_{nit}),\ c_{1t}(y_{njt})\right) - \text{diam}\left(c_{1t}(Y_{njt})\right) - \text{diam}\left(\psi_{11t}^{-1}(X_{nit})\right),$$

(4.21) will follow from

(4.22) (a) $\text{diam}\left(\psi_{11t}^{-1}(X_{nit})\right) \leq \dfrac{e_{1,n}}{6}$

(b) $\text{diam}\left(c_{1t}(Y_{njt})\right) \leq \dfrac{e_{1,n}}{6}$

(c) $\text{dist}\left(\psi_{11t}^{-1}(x_{nit}),\ c_{1t}(y_{njt})\right) \geq \frac{2}{3}e_{1,n}$

provided n is large.

Now, Lemmas (4.8c), (4.9a), and (4.19) imply that $\text{diam}\left(\psi_{11t}^{-1}(X_{nit})\right)\cdot e_{1,n}^{-1} \to 0$ as $n\to\infty$, which gives (4.22a). Analogously, $\text{diam}\left(c_{1t}(Y_{njt})\right)\cdot e_{2,n}^{-1} \to 0$ as $n\to\infty$, so (4.22b) follows since $e_{2,n} \leq K e_{1,n}$ by (4.20).

For (4.22c), observe that $\text{dist}\left(\psi_{11t}^{-1}(x_{nit}),\ c_{1t}(y_{njt})\right) =$ $\text{dist}\,(x_{nit}, \pi_{1t}^{u}\, c_{1t}\, y_{njt})$ is well approximated by $|a_1(t-b_0) + b_1 y_{njt} - x_{nit}|$ since this is the absolute value of the first terms of $\gamma_1(t, y_{njt}) - x_{nit}$. Further, $|a_1(t-b_0) - b_1 y_{njt} - x_{nit}| \geq e_{1,n} - |b_1|\,|y_{njt} - y_{nj}| - |x_{nit} - x_{ni}|$, so it suffices to show $|y_{njt} - y_{nj}|\cdot e_{1,n}^{-1}$ and $|x_{nit} - x_{ni}|\cdot e_{1,n}^{-1} \to 0$ as $n\to\infty$. But, (4.19) and Lemmas (4.8) and (4.10) give that $|y_{njt} - y_{nj}| \leq K_2\,|y_{nj}|\,|t-b_0| \leq K_2 A\,(t-b_0)$ and $|x_{nit} - x_{ni}| \leq K_2\,|x_{ni}|\,|t-b_0| \leq K_2 B\,(t-b_0)$

where $A = \max\left(\frac{1}{K_3} e_{2,n}; \frac{n^{2d+2}}{K_2 K_3} e_{2,n}\right)$ and $B = \max\left(\frac{1}{K_3} e_{1,n}; \frac{n^{2d+2}}{K_2 K_3} e_{1,n}\right)$.

Since $t - b_0 = \mu^n u_1$ is exponentially small for large n, and $e_{2,n} \le K e_{1,n}$, we obtain the required facts. This completes the proof of (4.16a) and (4.16b).

We have now completed the proof that Λ_t is hyperbolic.

Using the methods in [31], one shows that Λ_t is zero-dimensional. Moreover, $W^u(p_{2t}) \cap W^s(p_{2t})$ will be dense in Λ_t, so Λ_t is transitive, and (4.3) has been proved.

Observe that as t approaches b_0 in $U_\delta - B_\delta$, the minimum period of periodic points of ξ_t in V_2 goes to ∞. Thus, there are many different topological conjugacy types among these ξ_t's. Moreover, using the methods in [42], one can describe explicitly the orbit structure of $\xi_t|\Lambda_t$ in terms of non-negative integer matrices.

At this point, we indicate how to enlarge B_δ to obtain (4.4). As it stands, for $t \in U_\delta - B_\delta$, $y \in V_2$, $W^u(y,\xi_t)$ contains a u-disk C^2 near $f\left(D^u_{2\,f^{-1}(y)\,t}\right)$, and $W^s(y,\xi_t)$ contains an s-disk C^2 near D^s_{1yt}.

First, consider the set Q_{1t} of periodic points q of ξ_t such that $W^u(p_{1t},\xi_t) \cap W^s(q,\xi_t) \ne \emptyset$, $\dim W^s(q,\xi_t) = \dim W^s(p_{1t},\xi_t)$, and $q \notin V_1 \cup V_2$. Enlarging $\{X_{ni}\}$ we may assume $D^u_{1t} \bigcap \bigcup_{q \in Q_{1t}} W^s(q,\xi_t)$ $\bigcup \psi^{-1}_{11t}(X_{nit})$. Similarly, enlarging the collection $\{Y_{nj}\}$, assume

$D^s_{2t} \cap \bigcup_{q \in Q_{2t}} W^u(q,\xi_t) \subset \psi^{-1}_{11t}(Y_{njt})$ where Q_{2t} is the set of periodic points q of ξ_t with $W^s(p_{2t},\xi_t) \cap W^u(q,\xi_t) \neq \emptyset$, $\dim W^s(p_{2t},\xi_t) = \dim W^s(q,\xi_t)$, and $q \notin V_1 \cup V_2$. This can be done with at most $\bar{\zeta}_1(sn)$ X_{ni}'s and $\bar{\zeta}_2(sn)$ Y_{nj}'s where $\bar{\zeta}_1$ and $\bar{\zeta}_2$ are polynomials of degree bounded by the number of periodic points of f.

Let Q_{3t} be the set of periodic points q of ξ_t with $W^s(q,\xi_t) \cap W^u(p_{1t},\xi_t) \neq \emptyset$ and $\dim W^s(q,\xi_t) > \dim W^s(p_{1t},\xi_t)$.

If $y \in V_2 \cap W^s(q,\xi_t)$ for $q \in Q_{3t}$ and $W^s(y,\xi_t)$ is not transverse to $W^u(y,\xi_t)$, there is a one-dimensional direction near H_{1y} which is not in $T_y W^s(y,\xi_t) + T_y W^u(y,\xi_t)$. This means that the angle between $W^s(q,\xi_t) \cap D^u_{1t}$ and H_{1t} near $\pi^u_{1t}(y)$ is very large. Thus $\pi^u_{1t}(y)$ is nearly a critical point of $\pi^u_{11t}|W^s(q,\xi_t) \cap D^u_{1t}$. Make all the critical points of $\pi^u_{11}|W^s(q,f) \cap D^u_1$ non-degenerate for $p \in Q_3 = Q_{3b_0}$. Enlarge the collection $\{X_{ni}\}$ so that these critical points are in $\bigcup \psi^{-1}_{11}(X_{ni})$. Analogously, define Q_{4t} to be those periodic points q of ξ_t such that $W^s(p_{2t},\xi_t) \cap W^u(q,\xi_t) \neq \emptyset$ and $\dim W^u(q,\xi_t) > \dim W^u(p_{2t},\xi_t)$. Increase the set of intervals $\{Y_{nj}\}$ so that all critical points of $\pi^s_{21}|W^u(q,f) \cap D^s_2$ for $q \in Q_{4b_0}$ are in $\bigcup \psi^{-1}_{21}(Y_{nj})$. Again, the cardinality of the sets of intervals $\{X_{ni}\}$ and $\{Y_{nj}\}$ can be bounded by $\bar{\zeta}_1(sn)$, $\bar{\zeta}_2(sn)$ where

$\overline{\zeta}_1$ and $\overline{\zeta}_2$ are polynomials with degree less than the number of periodic points of f. Now one may enlarge B_δ so that for $t \in U_\delta - B_\delta$, and $y \in \bigcup \psi_{11t}^{-1}(X_{nit}) \cap \xi_t \bigcup \psi_{21t}^{-1}(Y_{nit})$, D^s_{1yt} is transverse to $\xi_t D^u_{2\xi_t^{-1}(y)t}$.

This will guarantee transversality of $W^s(y)$ and $W^u(y)$ at y in V_2.

Further, the methods which prove that MS is open (see §2 or [20]) will insure transversality at points whose orbits don't meet V_2 for $t - b_0$ small. This proves (4.4).

The proof of Theorem (4.2) for the case in which there is a 1-cycle is similar. In this case, the weakest contracting eigenvalue μ of $T_{p_2} f$ may be complex, but generically we will have $|\mu| < \lambda^{-1}$. The constructions in Lemmas (4.8) and (4.9) may be imitated, and the same general methods may be used. The essential fact is that the norm of an element in H_2 (which may be two-dimensional) is contracted by the constant $|\mu|$ in coordinates for which $f|_{H_2}$ is linear.

§5. Here we give the proofs of Lemmas (4.7), (4.8), and (4.9). This will complete the proof of Theorem (4.2).

Proof of Lemma (4.7). The proof consists of showing that one may redefine $E_1 \oplus E_2$ to give an almost hyperbolic splitting [18, §3] on a subset $V_3 \subset V_1 \cup V_2'$ such that $\bigcap_n f^n(V_1 \cup V_2) \subset V_3$.

For $0 \le k, \ell \le N$, let $V_{k\ell} = \{y \in V_2' : k(y) = k, \ell(y) = \ell\}$. Given $y \in M$ and j an integer, write $y_j = f^j(y)$. For $y \in V_{k\ell}$ and $-\ell \le j \le k$, let $F_{1y_j} = T_y f^j(E_{1y})$, and let $F_{2y_j} = T_y f^j(E_{2y})$.

Take $\tilde{V}_{k\ell} = \bigcup_{-\ell \le j \le k} f^j(V_{k\ell})$ and define the function $\alpha: \tilde{V}_{k\ell} \to \mathbb{R}$ so that if $y \in V_{k\ell}$, we have

$$S_{\alpha y_j} F_{2y_j} = T_y f^j(S_{\varepsilon y}) E_{2y} \quad \text{for } 0 < j \le k,$$

$$T_{y_j} M - S_{\alpha y_j} F_{2y_j} = T_y f^j(T_y M - S_{\varepsilon y} E_{2y}) \quad \text{for } -\ell \le j < 0,$$

and $\alpha = \varepsilon$ on $V_{k\ell}$.

Note that $\tilde{V}_{k\ell} \cap \tilde{V}_{mn} = \emptyset$ if $k \ne m$ or $\ell \ne n$.

Proceeding similarly on $\bigcup_{0 \le k, \ell \le N} \tilde{V}_{k\ell}$ and taking the function ε on $V_1 - \bigcup_{0 \le k, \ell \le N} \tilde{V}_{k\ell}$, we obtain a (possibly discontinuous) splitting and sectors on a subset V_3 of M containing $\bigcap_n f^n(V_1 \cup V_2)$. Relabeling,

we call this new splitting $E_1 \oplus E_2$ and the function $\alpha|V_{k\ell}$ we call ε. Set $\varepsilon_2(y) = \varepsilon(y)$ and $\varepsilon_1(y) = \varepsilon(y)^{-1}$. Then the invariance properties of (1) and (2) of section 3 in [18] hold. To conclude that $\bigcap_n f^n(V_1 \cup V_2)$ is hyperbolic, we have to prove

(5.1) (a) $m\left(T_y f^n | S_{\varepsilon_2 y} E_{2y}\right) \geq \lambda_1$

and

(b) $m\left(T_y f^{-n} | S_{\varepsilon_1 y} E_{1y}\right) \geq \lambda_1$ with $\lambda_1 > 1$.

if n is large and $y \in V_n$.

We will show there is an integer $n > N$ such that if $y \in \bigcap_{-n \leq j \leq n} f^j (V_1 \cup V_2)$, then (5.1a) holds. Similarly, (5.1b) is obtained and Lemma (4.7) will be proved.

For $n > 3$, set $V_n = \bigcap_{-n \leq j \leq n} f^j (V_1 \cup V_2)$.

Our first goal is to prove

(5.2) there is an integer $n_0 > N$ such that if $y \in V_{n_0}$, there is an integer $k(y)$ with $0 < k(y) \leq n_0$ such that

$$m\left(T_y f^{k(y)} | S_{\varepsilon_2 y} E_{2y}\right) \geq \lambda_1 > 1.$$

Indeed, once (5.2) is established, let $K_1 = \inf \{m(T f^j): \ 0 < j < n_0\}$, and let $n_1 > n_0$ be such that $\lambda_1^{n_1} K_1 > \lambda_1$. Then for any integer $j > 0$, we have $m\left(T_y f^{jn_0} | S_{\varepsilon_2 y} E_{2y}\right) \geq \lambda^j K_2$ provided that $y \in V_{jn_0}$. Thus (5.1a) follows with $n = j n_0$ and $j \geq n_1 n_0^{-1}$. From now on always assume $n \geq N$.

Note that (4.7b) gives that for $z = f^{\ell(y)}(y)$, $T_z f^{-\ell(y)}(S_{\varepsilon z} E_{2z}) \subsetneq S_{\varepsilon y}(E_{2y})$. Thus, we may change the Riemann metric on a neighborhood V_4 of V_2' so that for $y \in V_4$

(5.3) (a) $m\left(T_{f^{-1}(y)} f \,|\, T_z f^{-\ell(y)-1}(S_{\varepsilon z} E_{2z})\right) > \lambda_1$

and

(b) $m\left(T_{f(y)} f^{-1} \,|\, T_w f^{-k(y)+1}(T_w M - S_{\varepsilon w} E_{2w})\right) > \lambda_1$

where $w = f^{k(y)}(y)$.

Actually, only (5.3a) is needed for (5.1a), but (5.3b) is needed for (5.1b). In this new metric (extended to M) we will show that (5.2) holds to obtain (5.1a).

Remark: Our definition of hyperbolicity appears to depend on the Riemann metric, but as is well known one can give a definition equivalent to ours which is independent of the Riemann metric [8, (3.1)].

Now, if $y \in V_n \cap V_2'$, then (4.7a) guarantees that $m\left(T_y f^{k(y)} \,|\, S_{\varepsilon_2 y} E_{2y}\right) \geq \lambda_1 > 1$ for some $0 < k(y) \leq N$. Also, if in addition $y \in V_2' \cap f^{-j}(V_2')$ for some $j > N$ with $f^i(y) \notin V_2'$ for $0 < i < j$, then (5.3a) gives $m\left(T_y f^j \,|\, S_{\varepsilon_2 y} E_{2y}\right) \geq \lambda_1^{j-k(y)+1} > \lambda_1^2$. Furthermore, $y \in V_n - \cup \tilde{V}_{k\ell}$ implies that $m\left(T_y f \,|\, S_{\varepsilon_2 y} E_{2y}\right) \geq \lambda_1$.

To prove (5.1a), we need only worry about $y \in \cup \tilde{V}_{k\ell} - V_2'$ if we choose $n > N$. Let $K_2 = \inf\{m(T_y f^j) : y \in V_1 \cup V_2, -N \leq j \leq N\}$. Choose $n_2 > n_1$ large enough so that $\lambda_1^{n_2-N} K_1^2 \geq \lambda_1$ and $\lambda_1^{n_2-N} K_1 \geq \lambda_1$. Set

$n_3 = n_2^2$. We claim that if $y \in V_{n_3} \cap (\bigcup \tilde{V}_{k\ell} - V_2')$, then $m(T_y f^k | S_{\varepsilon_2 y} E_{2y}) \geq \lambda_1$ for some $0 < k \leq n_3$.

To prove this, let $y \in V_{n_3} \cap (\tilde{V}_{k\ell} - V_2')$ for some $0 \leq k, \ell \leq N$. First suppose $f^i(y) \notin V_2'$ for $0 \leq i \leq n_3$. Then $m(T_y f^{n_2} | S_{\varepsilon_2 y} E_{2y}) \geq \lambda^{n_2 - N} K_1 \geq \lambda_1$. Now suppose $f^i(y) \in V_2'$ for some $0 < i < n_3$. Let $0 = j_0 < j_1 < j_2 < \ldots < j_r \leq n_3$ be the distinct integers such that $f^{j_i}(y) \in V_2'$. Set $j_{r+1} = n_3$. If $j_i - j_{i-1} \leq n_2$ for all i, then $r \geq n_2$, and $m(T_y f^{n_3} | S_{\varepsilon_2 y} E_{2y}) = m(T_y f^{n_3 - j_r} f^{j_r - j_{r-1}} \ldots f^{j_2 - j_1} f^{j_1})$ $\geq K_1 \underbrace{\lambda_1^2 \ldots \lambda_1^2}_{r-1} \lambda_1^{j_1 - N} K_1 > \lambda_1^{2r-2+1} K_1^2 \geq \lambda_1$. On the other hand if there is a least integer $i > 1$ such that $j_i - j_{i-1} > n_2$, then

$$\begin{aligned} m(T f^{j_i} | S_{\varepsilon_2 y} E_{2y}) &\geq K_1 \lambda_1^{j_i - j_{i-1}} \ldots \lambda^{j_1 - N} K_1 \\ &\geq K_1^2 \lambda_1^{n_2 - N + 1} \lambda^{j_{i-1} - j_{i-2}} \ldots \lambda_1^{j_1 - N} \\ &> \lambda_1^{n_2 - N} K_1^2 \geq \lambda_1. \end{aligned}$$

This completes the proof of (5.1a).

<u>Proof of Lemma (4.8).</u> Let $p_1 = q_1, \ldots, q_\nu = p_2$ be the distinct periodic points in Λ_1 and assume, to simplify notation, that $f(q_i) = q_i$ for all i. There is no difficulty in extending to the general case.

Let $D_i^s \times D_i^u \underset{\text{def}}{=} W_i$ be a neighborhood of q_i in which

$f\big|_{D_i^s \times 0 \cup 0 \times D_i^u}$ is linear in some C^∞ coordinates ϕ_i on W_i. Take $\pi_i^s\colon W_i \to D_i^s$, $\pi_i^u\colon W_i \to D_i^u$ to be the usual projections, and for $y \in W_i$, let $D_{iy}^s = \pi_i^{u^{-1}}(\pi_i^u y)$ and $D_{iy}^u = \pi_i^{s^{-1}}(\pi_i^s y)$. Pick $0 < \tau < 1$ such that $\mu^{\frac{1}{2}} < \tau$, $\max\{|T_y f|D_{iy}^s|, |T_y f^{-1}|D_{iy}^u|\colon y \in W_i, i = 1, \ldots, \nu\} < \tau$, and $\min\{m(T_y f^{-1}|D_{iy}^s), m(T_y f|D_{iy}^u)\colon y \in W_i, i = 1, \ldots, \nu\} > \tau^{-1}$.

For $1 \le i \le \nu$, define beh (q_i, q_ν) to be the largest length of a sequence $q_i = q_{i_1}, \ldots, q_{i_j} = q_\nu$ such that $\hat{W}^u(q_{i_k}) \cap \hat{W}^s(q_{i_{k+1}}) \neq \emptyset$ for $1 \le k < j$.

Relabeling, assume $i \le j$ implies beh $(q_i, q_\nu) \ge$ beh (q_j, q_ν).

For a subset D of W_i, recall from section 3 that its u-width, $\omega_u(D)$, is $\sup_{y \in W_i} \left(\operatorname{diam}(D_{iy}^u \cap D)\right)$. Also, if Σ^s is an s-disk in W_i, its u-slope, $\rho_u(\Sigma^s)$, is $\sup\left\{\frac{|\pi_i^u v|}{|\pi_i^s v|}\colon y \in \Sigma^s, v \in T_y\Sigma^s, \pi_i^s v \neq 0\right\}$.

Given an integer $k > 0$, we say a set D is <u>k-disconnected</u> if D has at most k connected components.

Let $c_1, c_2 > 0$ be constants. A subset $D \subset W_i$ will be called (c_1, c_2, k)-controlled (in W_i) if

(a) $\omega_u(D) < c_1 \tau^k$

(b) D is a union of s-disks whose u-slopes are less than c_2 and whose boundaries lie in $\pi_i^{s^{-1}}\left(\partial(D_i^s \times 0)\right)$.

We will first prove by downward induction on i that for $1 \le i \le \nu$, there are a neighborhood V_i' of $\{q_\nu\} \cup \bigcup_{i \le j \le \nu} W^s(q_j) \cap \bigcup_{i \le j < \nu} W^u(q_j)$, constants $c_{i1}, c_{i2} > 0$, an integer $N_i > 0$, and a polynomial $\zeta_i(z)$ of degree less than or equal to beh (q_i, q_ν) such that

(5.4) for $k, n \ge N_i$, $\bigcap_{0 \le \ell \le k} f^{-\ell}(V_i') \cap W_i \cap f^{-k}(\Delta_2^n)$ is $\zeta_i(k)$-disconnected, each of its components is contained in a (c_{i1}, c_{i2}, k) controlled set in W_i, and

$$\operatorname{dist}\Big(\bigcap_{0 \le \ell \le k} f^{-\ell}(V_i'),\ W^s(\Lambda_1) \cap V_i'\Big) < c_{i1}\tau^k.$$

First, by several applications of the λ-lemma [20], we may assume each W_i is chosen so that if $y \in W_i \cap W^s(\Lambda_1)$, the connected component of $W^s(y) \cap W_i$ containing y is an s-disk whose boundary is in $\partial(\pi_i^{s^{-1}}(D_i^s \times 0))$ and whose u-slope is less than c_2 for some constant c_2 independent of y and i.

Let $V_\nu' = W_\nu$ and choose $N_0 > 0$ so that for $n \ge N_0$, $\Delta_2^n \subset W_\nu$. From the definition of Δ_2^n, we have that $\omega_u(\Delta_2^n) \le c_3\tau^n$, $n \ge N_0$, for some constant $c_3 > 0$ since $\mu^{1/2} < \tau < 1$. By the λ-lemma, there are a constant $c_4 > 0$ and an integer $N_0'' > N_0'$ such that for $k \ge N_0''$, $y \in \bigcap_{0 \le \ell \le k} f^{\ell}(W_\nu)$, the connected component of $f^{-k}(y)$ in $f^{-k}(D_1^s y)$ is an s-disk whose u-slope is less than $c_4\tau^{2k}$. Observe that $f|D_{iy}^u$ and

$f^{-1}|D^s_{iy}$ expand by at least τ while $f|D^s_{iy}$ and $f^{-1}|D^u_{iy}$ contract by at least τ on each W_i. Thus there are an integer $N_0 > N_0''$ and a constant $c_5 > 0$ such that for $k \geq N_0$, each set $\bigcap_{0\leq \ell\leq k} f^{-\ell}(V_\nu') \cap f^{-k}(\Delta_2^n)$ is an $(s+u)$-disk whose u-width is less than $c_5\tau^k$ and which is a union of s-disks whose u-slopes are less than $c_5\tau^{2k}$. Thus, $\bigcap_{0\leq \ell\leq k} f^{-\ell}(V_\nu') \cap f^{-k}(\Delta_2^n)$ is in a connected $(c_5, c_5\tau^{2k}, k)$-controlled set in W_ν for $n,k \geq N_0$. So we take $c_{01} = c_5$, $c_{02} = c_5\tau^{2N_0}$, and the polynomial $\zeta_0(z)$ to be the constant 1.

Assume now, inductively, that there are a neighborhood V_i', a p polynomial $\zeta_i(z)$ of degree $\leq \text{beh}\,(q_i, q_\nu)$, an integer $N_i > 0$ and constants c_{i1}, c_{i2} as in (5.4). We assume that $c_{i1} \geq c_{k1}$, $c_{i2} \geq c_{k2}$, $N_i \geq N_k$ for $i < k$.

Consider q_{i-1}. The u-slope of each component of $W^s(\Lambda_1 \cap V_i') \cap W_{i-1} - f^{-1}(W_{i-1})$ is bounded by $c_2 > 0$. Choose $N > 0$ such that $f^N\big(W_{i-1} - f^{-1}(W_{i-1}) \cap W^s(\Lambda_1)\big) \subset V_i'$. Choose $c_3 > 0$ such that if $y \in V_i'$, $\text{dist}\,\big(y, W^s(\Lambda_1)\big) < c_3$, and $f^{-j}(y) \in W_{i-1}$ for some $0 < j \leq N$, then the s-disk through y in V_i' given by (5.4) pulls back by f^{-j} to an s-disk in W_{i-1} whose u-slope is less than c_2. Choose $N' > 0$ such that $\text{dist}\,\big(\bigcap_{0\leq \ell\leq N'} f^{-\ell}(V_i'), W^s(\Lambda_1) \cap V_i'\big) < c_3$. Choose $N'' > 0$ such that

$$f^{N''}\big(W^s(\Lambda_1) \cap W_{i-1} - f^{-1}(W_{i-1})\big) \subset \bigcap_{0\leq \ell\leq N'} f^{-\ell}(V_i').$$

Let $V'_{i-1} = \bigcup_{0\le j\le N''} f^{-j}\left(\bigcap_{0\le \ell\le N'} f^{-\ell}(V_i')\right) \cup W_{i-1}$. Set $N_{i-1} = N + N' + N'' + N_i$. Then for $n,k \ge N_{i-1}$, consider $V'_{i-1,nk} \overset{\text{def}}{=} \bigcap_{0\le\ell\le k} f^{-\ell}(V'_{i-1}) \cap W_{i-1} \cap f^{-k}(\Delta_2^n)$. For $y \in V'_{i-1,nk}$, let k_1 be the least integer such that $f^{k_1}(y) \in V_i'$. Then $f^{k_1}(y) \in \bigcap_{0\le\ell\le k-k_1} f^{-\ell}(V_i') \cap f^{-k+k_1}(\Delta_2^n)$. Notice that by increasing N' (and hence N_{i-1}), we may insure that $k - k_1 \ge N_i$. Therefore, by induction, $f^{k_1}(y)$ is in a $(c_{i1}, c_{i2}, k-k_1)$ controlled set which is at most $\zeta(k-k_1)$ disconnected where ζ is a polynomial with $\deg \zeta \le \text{beh}\,(q_{i-1}, q_\nu) - 1$. Thus $f^{k_1-N''}(y)$ is in a $(c_1', c_2, k-k_1)$ controlled set in W_{i-1} which is at most $N''\zeta(k-k_i)$ disconnected where c_1' is some constant depending on $\{f^{-j}: 0 \le j \le N''\}$. Thus, y is in a $(c_1', c_2, k-k_1+k_1-N'')$ controlled set which is at most $(k_1 - N'')N''\zeta(k-k_1)$ disconnected. Let $\zeta_{i-1}(z)$ be defined so that $\zeta_{i-1}(z) \ge z N''\zeta(z)$. Then (5.4) is proved for $i-1$.

A similar proof works for $\bigcap_{0\le\ell\le k} f^{-\ell}(V_i') \cap W_i$, $1 \le i \le \nu$. Thus, there are a neighborhood V_1 of $\Lambda_1 \cup o(x) - x$ with $x \notin V_1$, constants $c_1, c_2 > 0$ an integer $N > 0$ and a polynomial $\zeta(z)$ of degree $\le \text{beh}\,(p_1, p_2)$ such that for $k,n > N$, $\bigcap_{0\le\ell\le k} f^{-\ell}(V_1) \cap W_1 \cap f^{-k}(\Delta_2^n) \cup \bigcap_{0\le\ell\le k} f^{-\ell}(V_1) \cap W_1$

is $\zeta(k)$-disconnected and each of its components is in a (c_1,c_2,k)-controlled disk in W_1. From the definitions of Δ_1^n and τ, we have that, for n large, $f^j(\Delta_1^n) \subset V_1$ provided $0 \le j \le \frac{n}{2}$; that is, $\Delta_1^n \subset \bigcap_{0\le j\le\frac{n}{2}} f^{-j}(V_1)$. Thus there is an integer $N > 0$ so that for $k \ge \frac{n}{2} \ge N$, $\Delta_{1,k}^n \subset \bigcup_{\frac{n}{2}\le k_1\le k}\left(\bigcap_{0\le\ell\le k_1} f^{-\ell}(V_1) \cap W_1 \cap f^{-k_1}(\Delta_2^n)\right)$. Setting $\zeta_1(z) = z\,\zeta(z)$ and taking N large, we have, for $k \ge n \ge N$, that $\Delta_{1,k}^n \cup \bigcap_{0\le j\le k} f^{-j}(V_1)$ is $\zeta_1(k)$ disconnected and each of its components is in a $(c_1,c_2,\frac{n}{2})$-controlled set in W_1. For $k \ge n \ge N$, let $V_{1nk} = \Delta_{1,k}^n \cup \bigcap_{0\le j\le k} f^{-j}(V_1)$, and let $V_{2nk} = V_{1nk} \cap W_1 - f^{-1}(W_1)$. Then $V_{2nk} \subset \bigcup_{1\le j\le\zeta(k)} D_j$ where D_j is a $(c_1,c_2,\frac{n}{2})$-controlled disk in W_1 and $\deg\zeta \le \mathrm{beh}\,(p_1,p_2)$. Let X_{nj0} be an interval in $H_1 \cap W_1 - f^{-1}(W_1)$ whose diameter is twice that of $D_j \cap D_1^u$ and whose center is π_{11}^u of the center of $D_j \cap D_1^u$. For $1 \le k \le sn$, $s > 0$, let $X_{njk} = f^{-k}(X_{nj0})$. There is a constant $K > 0$ such that $\mathrm{diam}\left(\pi_{11}^u\left(\bigcap_{0\le j\le sn} f^{-j}(W_1)\right)\right) \le K\lambda^{-sn}$ for n N. Let X_n be an interval in H_1 centered in P_1 with diameter less than $3K\lambda^{-sn}$ such that $\mathrm{dist}\left(\pi_{11}^u\left(\bigcap_{0\le j\le sn} f^{-j}(W_1)\right), \partial X_n\right) > \frac{K}{2}\lambda^{-sn}$.

Then, the desired collection of intervals $\{X_{ni}\}$ in H_1 for Lemma (4.8) is $\{X_n\} \cup \{X_{njk}: 1 \le j \le \zeta(k), \frac{n}{2} \le k \le sn\}$. Clearly, there are at most $\zeta_1(sn)$ such intervals where $\deg \zeta_1 \le \text{beh}(p_1,p_2)+1$, and, if W_1 is chosen small to begin with, $\Delta^n_{1,sn} \cup \bigcap_{0\le j\le sn} f^{-j}(V_1) \subset \bigcup_{1\le i\le \zeta_1(sn)} \psi_{11}^{-1}(X_{ni})$ so (4.8a) holds. On the other hand, since $f^{-1}|D_1^u$ is linear, we have for $y \in V_{1nk} \cap D_1^u - f^{-1}(D_1^u)$, $d(f^{-\ell}(y),\lambda^{-\ell}(y)) \le c_3 \lambda_1^{-\ell}|y|$ for $\ell \ge 0$ where c_3 is a constant, $\lambda < \lambda_1$, and $|y|$ denotes the norm of y in D_1^u. This, and the definition of the intervals X_n, X_{njk}, give (4.8c). Parts (4.8b) and (4.8d) are established similarly.

<u>Proof of Lemma (4.9).</u> We prove (4.9a) and leave the analogous proof of (4.9b) to the reader.

First we claim

(5.5) For $t-b_0$ small, $x_{ni} \in D_1^u - f^{-1}(D_1^u)$,

$$|x_{nit} - x_{ni}| \le K_1' \, |t-b_0| \, |x_{ni}| \text{ where } K_1' \text{ is a constant.}$$

(5.5) is a consequence of the fact that x_{nit} is a differentiable function of t for t near b_0. Using this, there is a constant K_1'' such that $|x_{nit} - x_{ni}| \le K_1'' |t-b_0|$ for $|t-b_0|$ small. Then (5.5) follows since $|x_{ni}|$ is bounded below for $x_{ni} \in D_1^u - f^{-1}(D_1^u)$.

The differentiable dependence of x_{nit} on t may be proved by induction on the number of periodic points $\{q_1, \ldots, q_\nu\}$ or as follows. One may construct an arc η_t of diffeomorphisms of M such that

(a) $\{x_{nit}\} = \pi_{11}^{u}\{D_{1t}^{u} \cap [\bigcup_{j \le 0} \xi_t^{-j}(D_{2y_t}^{s}) \cup W^s(\Lambda_{1t})]\}$ where y_t is the point in $W^u(p_{1t},\xi_t)$ associated to $\xi_{b_0}^{-1}(x)$.

(b) the set $D_{1t}^{u} \cap [\bigcup_{j \le 0} \xi_t^{-1}(D_{2y_t}^{s}) \cup W^s(\Lambda_{1t})]$ is contained in a hyperbolic set $\Lambda(\eta_t)$ for η_t.

(c) $\eta_t = \xi_t^{-1}$ on a neighborhood of V_{1t}.

(d) there is a homeomorphism $h_t\colon \Lambda(\eta_{b_0}) \to \Lambda(\eta_t)$ such that $x_{nit} = h_t(x_{ni})$ and the map $t \mapsto h_t$ is differentiable from a neighborhood of b_0 into $C^0(\Lambda(\eta_{b_0}), M)$.

Fact (c) is proved in the well-known manner of proving that the conjugacy in the Ω-stability theorem is a differentiable function of the diffeomorphism (see [4]). Now we prove (4.11a).

Let $x_{ni} \in D_1^u - f^{-1}(D_1^u)$, $k > 0$. We need to show that, in local coordinates, $|\xi_t^{-k}(x_{nit}) - f^{-k}(x_{ni})| \le K|f^{-k}(x_{ni})||t - b_0|$ for some constant $K > 0$.

We may assume that $\phi_{1t}\xi_t^{-1}\phi_{1t}^{-1}$ is linear on $\phi_{1t}H_{1t} = \mathbb{R}$ and is equal to the map $v_1 \mapsto \lambda_t^{-1}v_1$ with λ_t^{-1} varying differentiably with t near b_0.

Now, $\lambda_t^{-1} = \lambda^{-1} + o(t)$ with $\lim_{t \to b_0} \frac{|o(t)|}{|t - b_0|} = 0$. Thus,

$$|\xi_t^{-k}(x_{nit}) - f^{-k}(x_{ni})| = |(\lambda^{-1} + o(t))^k(x_{nit}) - \lambda^{-k}(x_{ni})|$$

$$= |\lambda^{-k}(1+o_1(t))(x_{ni}+x_{nit}-x_{ni}) - \lambda^{-k}(x_{ni})|$$

$$= |\lambda^{-k}(x_{ni}) + \lambda^{-k}(x_{nit}-x_{ni}) + \lambda^{-k}(o_1(t)(x_{ni}))$$

$$+ \lambda^{-k}(o_1(t)\ (x_{nit}-x_{ni})) - \lambda^{-k}(x_{ni})|$$

$$= |\lambda^{-k}(x_{nit}-x_{ni}) + \lambda^{-k}(o_1(t)\ (x_{ni})) + \lambda^{-k}(o_1(t)\ (x_{nit}-x_{ni}))|$$

$$\leq K'\ |t-b_0|\ \lambda^{-k}(x_{ni}) + \lambda^{-k}((x_{ni})\ o_1(t)) + \lambda^{-k}(o_1(t))\ K'\ |t-b_0|\ (x_{ni})$$

where $K' > 0$ and $\lim_{t\to b_0} \frac{|o_1(t)|}{|t-b_0|} = 0$. This gives (4.11a) since the x_{ni}'s in the statement of (4.11a) are of the form $\lambda^{-k}(x_{ni})$ with $x_{ni} \in D_1^u - f^{-1}(D_1^u)$.

§6. In this final section we make some concluding remarks about the theorems already described, and we discuss briefly the possible extension of the results to bifurcations of general Axiom A systems.

The first question concerns the possibility of extending Theorem (4.2) to the case when ξ_{b_0} has a non-equidimensional cycle, or, equivalently, when $\dim W^u(p_1) = \dim W^u(p_2) + 1$ in the notation of §4.

Let us mention that one can give rather strong conditions analogous to those in (5.2) of [18] to insure that structurally stable ξ_t appear for infinitely many t's with $t - b_0 > 0$ small. While these conditions hold for an open set of ξ's, they are far from dense among those for which $L^-(\xi_{b_0})$ is finite and hyperbolic.

In general, several new phenomena appear in the non-equidimensional case, and we may illustrate these with the following 2-cycle on a three dimensional manifold.

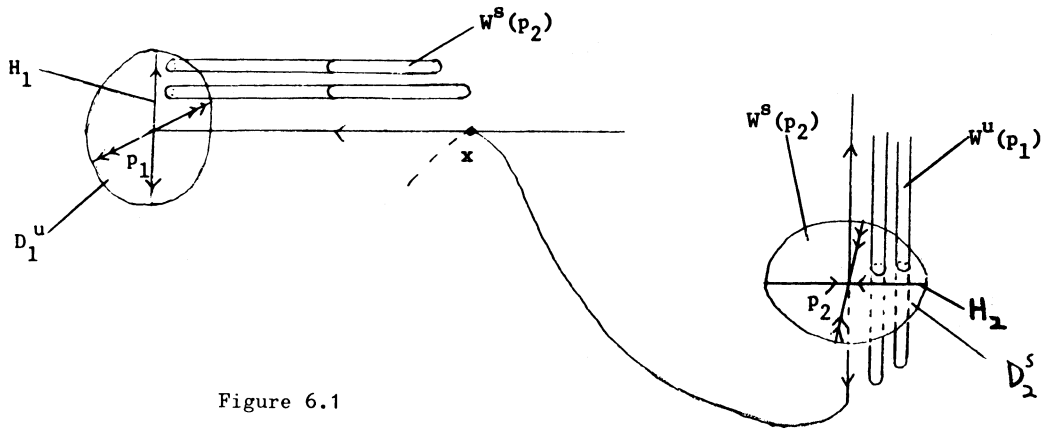

Figure 6.1

The figure describes parts of $W^u(p_1)$, $W^s(p_1)$, $W^u(p_2)$, and $W^s(p_2)$ for ξ_{b_0}. D_1^u, H_1, D_2^s, and H_2 are defined as in §4. In this example $W^s(p_2) \cap W^u(p_1)$ is a countable union of disjoint circles, and $W^u(p_2) \cap W^s(p_1)$ is the orbit of a quasi-transversal intersection x. For $t > b_0$, $W^u(p_2)$ is raised near x as in the next figure.

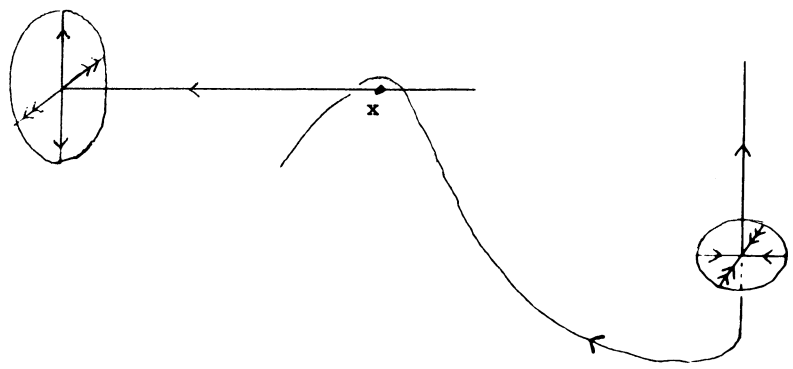

Figure 6.2

Under certain conditions all the pieces of $W^u(p_2) \cup W^u(p_1)$ may be raised to miss small neighborhoods of those of $W^s(p_2) \cup W^s(p_1)$ and the resulting diffeomorphism will again be Morse-Smale. On the other hand if the pieces of $W^u(p_2) \cup W^u(p_1)$ are raised to meet those of $W^s(p_1) \cup W^s(p_2)$ transversely in an appropriate way, the resulting diffeomorphism will be in AS and will have an infinite non-wandering set. In the latter case, there are two infinite hyperbolic sets near x corresponding to the

closures of the homoclinic points of p_{1t} and p_{2t}, respectively, and $W^u(p_{1t}) \cap W^s(p_{2t})$ contains wandering points. It is clear that this situation is more complicated than the equidimensional case in which a single topologically transitive hyperbolic set appeared. Moreover, while we have some specialized results as indicated above, we have not yet obtained the proof of a general theorem analogous to Theorem (4.2).

The next question relates to the possible extension of Theorem (4.2) to the case when ξ_{b_0} has a quasi-hyperbolic periodic point in a cycle. As a simple example consider a Morse-Smale diffeomorphism f on S^2 having a single invariant smooth circle C which contains a fixed sink p_1 and a fixed saddle point p_2. Assume f is normally hyperbolic to C [10], and $L(f) - \{p_1, p_2\}$ consists of two sources as in Figure 6.3.

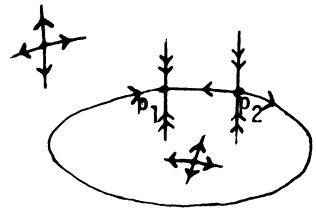

Figure 6.3

With a smooth curve of diffeomorphisms ξ_t, $0 \le t \le 1$, slide p_1 and p_2 together leaving C invariant for all t. Do this so that ξ_t always remains normally hyperbolic to C. It may be arranged that at the time $t = b_0(\xi)$ when p_1 becomes equal to p_2, $p = p_1 = p_2$ is a quasi-hyperbolic fixed point for ξ_{b_0}, and $W^u(p) = W^s(p) = C$ as in Figure 6.4.

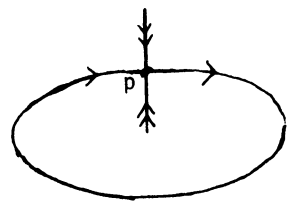

Figure 6.4

It is not hard to see that the rotation number of $\xi_t|_C$ (see [7]) will vary through an interval for $b_0 \le t < b_0 + \varepsilon$, so any perturbation of ξ will necessarily have infinitely many bifurcation points near b_0. Now, using Peixoto's theorem and arguments in [18] one may show that for most arcs η near ξ, there are neighborhoods U_η of $b_0(\eta)$ in I for which $B(\eta) \cap U(\eta)$ is nowhere dense. Thus, this situation is pretty well understood. However, in contrast to Theorem (4.2a), one might not expect

meas $(B(\eta))$/diam $U(\eta)$ to be small with diam $U(\eta)$. This is because the arc η restricted to the invariant circle induces a curve ϕ_t of diffeomorphisms of the circle S^1. Generic arcs of diffeomorphisms of the circle do not necessarily have bifurcation sets of measure zero. For instance, one could choose a (non-generic) C^5 curve ϕ_t such that the rotation number varies as $\alpha(t-b_0)$ for $b_0 < t < b_0+\varepsilon$ with α a monotone positive function. Then the map $(u,t) \mapsto (\phi_t(u),t)$ for $(u,t) \in S^1 \times [b_0, b_0+\varepsilon)$ is a twist mapping [11], [12, p. 227]. Any C^5 perturbation ψ of the map $(u,t) \mapsto \phi_t(u)$ gives a map $(u,t) \mapsto (\psi(u,t),t)$ whose invariant circles corresponding to strongly irrational rotations have measure close to the measure of $S^1 \times [b_0, b_0+\varepsilon)$. While generically, there are many Morse-Smale diffeomorphisms ξ_t for t arbitrarily near b_0, it seems unlikely that meas $B(\xi)$/diam $U(\xi)$ will be small even if diam $U(\xi)$ is small.

Now, suppose that before bringing p_1 and p_2 together to p one pushes in $W^u(p_2)$ to the left of p_1 as in Figure 6.5.

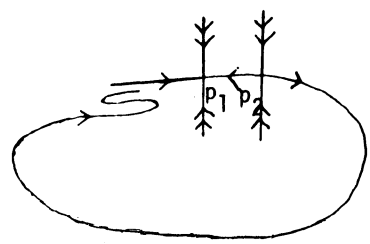

Figure 6.5

This will cause $W^u(p_2)$ to oscillate as it approaches p_1 and $W^u(p_2) \cup \{p_1\}$ is no longer contained in a smooth circle. Now bring p_1 and p_2 together via an arc ξ_t as before. In certain cases, this procedure gives infinitely many different Morse-Smale diffeomorphisms ξ_t for $t > b_0(\xi)$ while in other cases ξ_t can have hyperbolic periodic points with transversal homoclinic points. Which of these cases occurs depends on the structure of ξ_{b_0} on $W^u(p)$ away from a small neighborhood of p.

Of course, one may enlarge the situation to produce cycles of any given length containing a quasi-hyperbolic fixed point as in Figure 6.6.

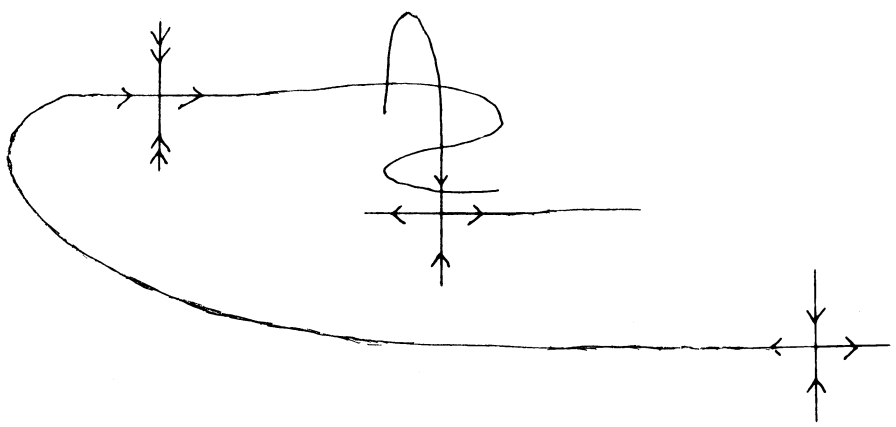

Figure 6.6

If the cycle for ξ_{b_0} has length greater than 1, then one always has transversal homoclinic points for ξ_t, $t > b_0$.

It should be pointed out that while these statements give some qualitative information about the structure of ξ_t for $t > b_0$, we do not yet have a general theorem about the existence of structurally stable diffeomorphisms near b_0. That is, we do not have a proof of a theorem analogous to Theorem (4.2) when ξ_{b_0} has a quasi-hyperbolic periodic point contained in a cycle. Nevertheless, we expect such a result to be true.

Consider now an arc $\xi \in \Phi^{k,r}$ with ξ_0 any diffeomorphism satisfying Axiom A and the transversality condition. Assume $b_0(\xi) < 1$. Generically, what can be said about the structure of ξ_t for t near b_0? As an example, let us look at Smale's horseshoe diffeomorphism on S^2 (see [32]). A square Q is mapped by a diffeomorphism f as in Figure 6.7 below with $f(A) = A'$, $f(B) = B'$, etc.

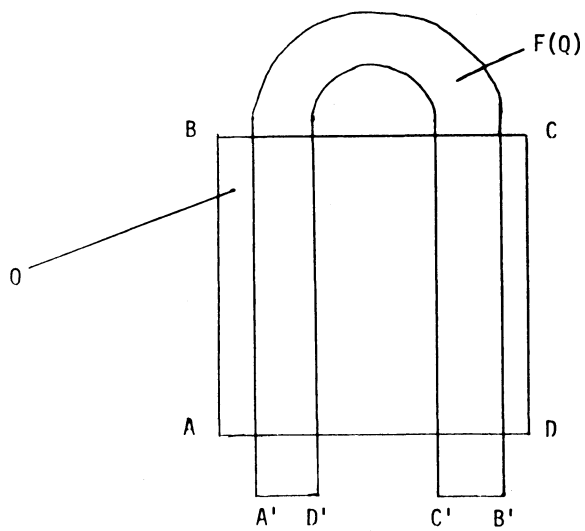

Figure 6.7

There will be a hyperbolic fixed point p in the left component of $f(Q) \cap Q$ whose stable and unstable manifolds enclose $\Lambda = \bigcap_{n \in \mathbb{Z}} f^n(Q)$ as in the next figure.

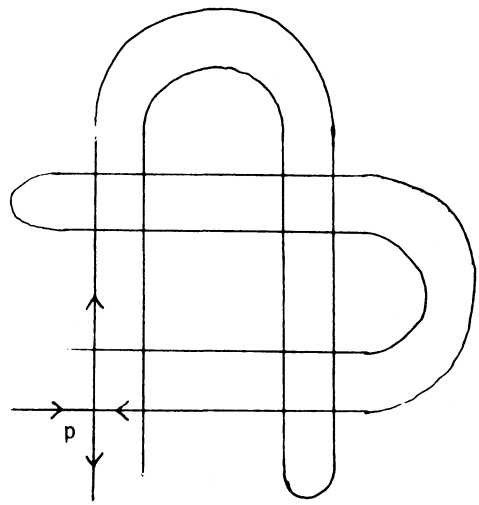

Figure 6.8

With a suitable modification of f off Q through a curve ξ_t one may introduce a quasi-transversal intersection x of $W^u(p)$ and $W^s(p)$ for ξ_{b_0} off Λ as in Figure 6.9.

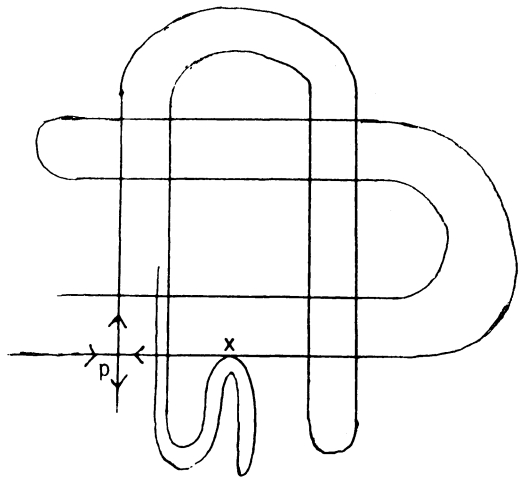

Figure 6.9

Then one has $\Omega(\xi_{b_0}) = \Omega(f) \cup o(x)$ and the general orbit structure of ξ_{b_0} is easily described. Indeed, there is a small neighborhood U of x so that if y, $f^n(y)$ are in U for $n > 0$, then y lies above x and $f^n(y)$ lies below x. Using this, one sees that $L(\xi_{b_0}) = \Omega(\xi_0)$ remains hyperbolic. However, the structure of ξ_t for $t > b_0$ is quite complicated. For example, if the appropriate Cantor sets in $\overline{W}^u(f)$ and $\overline{W}^s(f)$ are thick (see [14] for definitions and notation), none of the ξ_t will be structurally stable, and indeed many may have infinitely many sinks [16]. On the other hand, if the Cantor sets are thin, then there will exist infinitely many structurally stable diffeomorphisms among the ξ_t's, $t > b_0$.

For the next example, compose the horseshoe diffeomorphism f with an arc of downward translations for ξ_t so that f(Q) is moved downward with t. Let p_t denote the hyperbolic periodic point of ξ_t near p for t near b_0. Then $W^u(p_{b_0}, \xi_{b_0})$ will have a quasi-transversal intersection x with $W^s(p_{b_0}, \xi_{b_0})$ which lies in the closure of $\bigcap_{n \in \mathbb{Z}} \xi^n_{b_0}(Q)$ as in Figure 6.10.

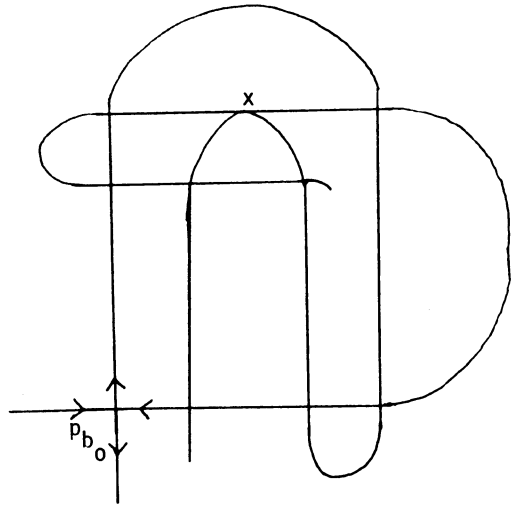

Figure 6.10

Here $\bigcap_n \xi^n_{b_0}(Q)$ will be a non-hyperbolic ξ_{b_0}-invariant topologically transitive set with periodic points dense. Also, all the periodic points will be hyperbolic. In this example, $\xi_{b_0}\big|\bigcap_n \xi^n_{b_0}(Q)$ is topologically conjugate to the quotient space obtained by identifying

two orbits in the shift automorphism on two symbols. Moreover, the remarks in the preceding example for $t > b_0$ are applicable here too.

For our next example one may introduce a quasi-hyperbolic periodic point near some periodic point of $f|Q$ so that for $t > b_0$, ξ_t is in AS and $\Omega(\xi_t)$ becomes modified. In the figure below, we introduce a quasi-hyperbolic fixed point near p.

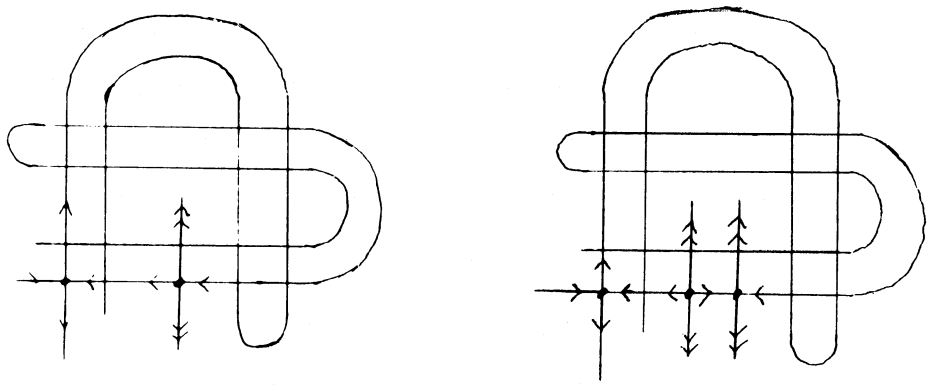

Figure 6.11

All of these bifurcations may be generalized to higher dimensions, and the other kinds of generic bifurcations of periodic points (see [36]) may be incorporated into basic sets (i.e. isolated invariant topologically transitive hyperbolic sets) in the obvious manner.

Also, the diffeomorphisms ξ_{b_0} in the above examples lie in smooth codimension one submanifolds of $\mathcal{D}^r(M)$. These periodic point bifurcations may radically change the non-wandering sets of a given Axiom A diffeomorphism. For example, R. Williams pointed out to us that one may pass from an Anosov diffeomorphism on the two torus to the DA diffeomorphism [41] after the introduction of one quasi-hyperbolic fixed point (see [17] for a description of this in the context of flows).

Other bifurcations may be obtained by introducing non-transversal intersections of stable and unstable manifolds of different hyperbolic basic sets. For example, in a four dimensional manifold consider an AS diffeomorphism with two basic sets Λ_1, Λ_2 which are two-dimensional tori such that $f|\Lambda_i$ is Anosov and $\hat{W}^u(\Lambda_1) \cap \hat{W}^s(\Lambda_2) \neq \emptyset$. Modifying f off $\Lambda_1 \cup \Lambda_2$ through a curve ξ_t, one may introduce an intersection between $\hat{W}^u(\Lambda_2, \xi_{b_0})$ and $\hat{W}^s(\Lambda_1, \xi_{b_0})$. If one first modifies f on Λ_1 so that Λ_1 ceases to be smooth (see [12, §6]) it appears that one may get non-smooth parts of the boundary of AS. This would be in contrast to the situation for MS. For in our open set of ξ's with $L(\xi_{b_0})$ having finitely many orbits, ξ_{b_0} lies in a smooth condimension one submanifold.

The main question is: are the examples so far described the only kinds of bifurcations which occur generically at ξ_{b_0} for $\xi_0 \in$ AS? To be more precise, we state the following problems. We feel that even partial answers to these questions would be interesting.

1. Is it true for most ξ with $\xi_0 \in$ AS that $L(\xi_{b_0})$ is a

finite union of closed invariant topologically transitive sets at most one of which is not hyperbolic?

2. Describe the set of arcs ξ with $\xi_0 \in AS$ such that ξ_{b_0} is in a smooth submanifold of codimension one.

3. Suppose f and g are in AS, $\dim \Omega(f) = \dim \Omega(g) = 0$, and f is isotopic to g. Is there an arc from f to g with a zero-dimensional bifurcation set?

4. Is the topological entropy $h(\xi_t)$ (see [7]) a continuous function of t for t near b_0 for most ξ with $\xi_0 \in AS$?

5. Describe $B(\xi)$ for most ξ with $\xi_0 \in AS$, $\xi_1 \in AS$ and $\dim \Omega(\xi_1) = 0$. In particular, assume ξ_0 is Anosov.

In closing, we make some comments about the use of the methods given here for flows (vector fields). The results carry over with the obvious changes for flows without critical points. Also, it does not appear difficult to determine the variations necessary to handle the cases when critical points occur. On the other hand, recent developments indicate that flows allow considerably more freedom for modifications of the non-wandering set with isolated bifurcations. For instance, Sotomayor showed us an example of an arc of flows with a single generic bifurcation joining a gradient-like Morse-Smale flow to an AS flow having infinitely many periodic orbits. The structure of these vector fields near the non-trivial basic sets was also discovered independently by Silnikov [29].

The example may be described as follows. Consider an MS gradient vector field X on a three dimensional manifold M having different saddle points p and q with $\dim W^u(p) = 2$, $\dim W^s(q) = 2$,

and $W^u(p) \cap W^s(q)$ consisting of three (one-dimensional) orbits γ_1, γ_2, and γ_3. See Figure 6.12.

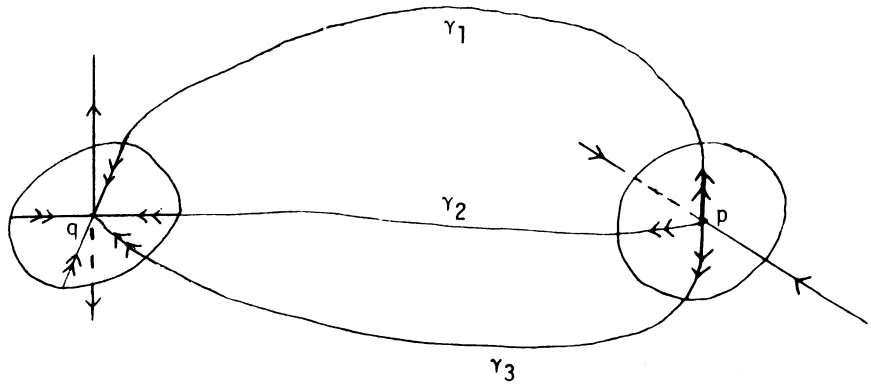

Figure 6.12

Moving X through a curve of MS vector fields one may make $\gamma_2 \cup \gamma_1 \cup \{p,q\}$ and $\gamma_3 \cup \gamma_1 \cup \{p,q\}$ into two curves tangent along $\gamma_1 \cup \{p,q\}$ as in Figure 6.13.

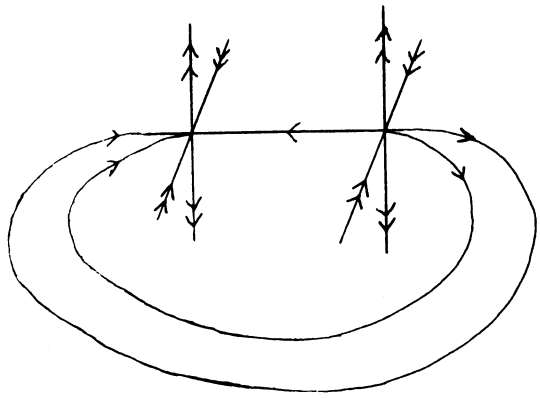

Figure 6.13

The double arrows indicate sharper rates of attraction or repulsion than the single arrows.

Now with a curve ξ_t of vector fields bring q and p together to create a quasi-transversal critical point. Immediately afterward, one will have an AS vector field Y such that $\Omega(Y)$ contains a closed invariant transitive hyperbolic set which is topologically equivalent to the suspension of a shift automorphism on two symbols. If one starts with $W^u(p) \cap W^s(q)$ having $n+1$ orbits, the same construction yields a basic set equivalent to the suspension of a shift on n symbols. The same phenomena may be obtained on a manifold of arbitrary dimension using critical points p and q with $\dim W^u(p) = \dim W^u(q) + 1$ and $W^u(p) \cap W^s(q)$ consisting of $n+1$ orbits. Note that if $W^u(p) \cap W^s(q)$

consists of only two orbits, the procedure produces a single hyperbolic closed orbit. If the intersection is a single orbit, the critical points cancel out as is familiar in Morse theory.

This example is actually a part of a general situation for flows. More precisely, with our methods transcribed to flows one may prove the following.

Let $I = [0,1]$ and let $\mathcal{X}^r(M)$ be the space of C^r vector fields on M, $r \geq 2$. For most $\xi \in C^k(I, \mathcal{X}^r(M))$, $k \geq 1$, $r \geq 2$, such that $\xi_0 \in MS$, $L(\xi_{b_0})$ has finitely many orbits, and $L(\xi_{b_0})$ contains a quasi-hyperbolic critical point, there is a neighborhood U of b_0 in I so that $B(\xi) \cap U = \{b_0\}$. If the quasi-hyperbolic critical point of ξ_{b_0} is contained in a cycle whose stable and unstable manifolds meet in more than two orbits, then $\Omega(\xi_t)$ will have infinitely many periodic orbits for $t > b_0$ in U. Otherwise, $\xi_t \in MS$ for $t \in U - \{b_0\}$. Observe that here we permit ξ_{b_0} to have cycles of arbitrary length.

In another direction, it is proved in [19] that any two MS flows may be joined by a stable arc with finitely many bifurcations. In [17] it is shown that this is true for a large class of AS flows with one dimensional non-wandering sets. Also, it holds for any AS flows on a manifold of dimension less than four. These last results have no analogs in the bifurcation theory of diffeomorphisms. Indeed, Proposition (2.4) of [18] shows that generally an arc of diffeomorphisms beginning in MS and ending in AS with an infinite non-wandering set necessarily has an infinite bifurcation set.

As a final remark, it is worthwhile to observe that all known examples of open sets of non-Ω-stable systems may be obtained near the

boundary of AS. That is, all the relevant phenomena in these examples already appear in ξ_t with t near b_0 for certain arcs ξ having $\xi_0 \in$ AS. Thus aside from being interesting in their own right, it seems that a good understanding of the problems in this section (and the analogous ones for flows) would contribute much to the theory of generic properties of non-parametrized dynamical systems.

LIST OF REFERENCES

[1] A. Andronov and R. Leontovich, I. I. Gordon, A. G. Maier, The theory of bifurcations of dynamical systems on the plane, "Nauka," Moscow, 1967. (Russian) MR 38 #3539.

[2] _____ and L. Pontrjagin, Systemes grossiers, Dokl. Akad. Nauk. SSSR, vol. 14 (1937), 247-251.

[3] P. Brunovsky, On one parameter families of diffeomorphisms, Comment. Math. Univ. Carolinae 11 (1970), 559-582.

[4] J. Franks, Differentiably Ω-stable diffeomorphisms, Topology 11 (1972), 107-114.

[5] N. Gavrilov and L. Silnikov, On three dimensional dynamical systems close to systems with a structurally unstable homoclinic curve I, Math USSR Sbornik, Vol. 17 (1972), No. 4, 467-485.

[6] J. Guckenheimer, Bifurcation and Catastrophe, Dynamical Systems, Ed. M. Peixoto, Academic Press, N. Y., 1973, 95-110.

[7] P. Hartman, Ordinary Differential Equations, J. Wiley and Sons, N. Y., 1964.

[8 M. Hirsch and C. Pugh, Stable manifolds and hyperbolic sets, Global Analysis, Proc. AMS Symp. in Pure Math., Vol. 14, 1970, 133-165.

[9] _____, C. Pugh, J. Palis, and M. Shub, Neighborhoods of hyperbolic sets, Invent. Math., Vol. 9 (1970), 121-134.

[10] _____, C. Pugh, and M. Shub, Invariant manifolds, to appear.

[11] J. Moser, Stable and Random Motions in Dynamical Systems, Ann. of Math. Studies, No. 77, Princeton Univ. Press, Princeton, N. J., 1973.

[12] _____, On a theorem of Anosov, Jour. Diff. Equations 5 (1969), 411-440.

[13] _____ and C. Siegel, Lectures on Celestial Mechanics, Springer, Grundlehren Bd. 187, 1971.

[14] S. Newhouse, Non-density of Axiom A(a) on S^2", Global Analysis, Proc. AMS Symp in Pure Math, Vol. 14, 1970, 191-202.

[15] _____, Hyperbolic limit sets, Trans. AMS 167 (1972), 125-150.

[16] _____, Diffeomorphisms with infinitely many sinks, Topology, Vol. 13 (1974), 9-18.

[17] S. Newhouse, On simple arcs between structurally stable systems, to appear.

[18] _____ and J. Palis, Bifurcations of Morse-Smale dynamical systems, Dynamical Systems, ed. M. Peixoto, Academic Press, N. Y., 1973, 303-366.

[19] _____ and M. Peixoto, There is a simple arc between any two Morse-Smale flows, to appear.

[20] J. Palis, On Morse-Smale dynamical systems, Topology 8 (1969), 385-405.

[21] _____, A note on Ω-stability, Global Analysis, Proc. AMS Symp. in Pure Math., Vol. 14, Amer. Math. Soc., Providence, R. I., 1970, 221-222.

[22] _____ and S. Smale, Structural stability theorems, Global Analysis, Proc. Symp. in Pure Math., Vol. 14, Amer. Math. Soc., Providence, R. I., 1970, 223-231.

[23] M. Peixoto, Structural stability on two-dimensional manifolds, Topology 1 (1962), 101-120.

[24] D. Ruelle and F. Takens, On the nature of turbulence, Comm. Math. Phys. 20 (1971), 167-192.

[25] R. Sacker, On invariant surfaces and Bifurcation of periodic solutions of ordinary differential equations, New York University, IMM-NYU, 333, October, 1964.

[26] M. Shub, Structurally stable systems are dense, Bull. A.M.S., Vol. 78 (1972), 817-818.

[27] _____, Dynamical Systems, filtrations, and entropy, Bull. A.M.S., to appear.

[28] _____ and D. Sullivan, Homology theory and dynamical systems, to appear.

[29] L. Silnikov, On a new type of bifurcation of multidimensional dynamical systems, Sov. Math. Dokl., Vol. 10 (1969), No. 6, 1368-1371.

[30] S. Smale, On gradient dynamical systems, Ann. of Math. 74 (1961), 199-206.

[31] _____, Diffeomorphisms with many periodic points, Differential and Combinatorial Topology, Princeton Univ. Press, Princeton, N. J., 1965, 63-80.

[32] _____, Differentiable dynamical systems, Bull. A.M.S. 73 (1967), 747-817.

[33] S. Smale, The Ω-stability theorem, Global Analysis, Proc. Symp. Pure Math. 14, Amer. Math. Soc., Providence, R. I., 1970, 289-298.

[34] _____, Stability and Isotopy in discrete dynamical systems, Dynamical Systems, ed. M. Peixoto, Academic Press, N. Y., 1973, 527-530.

[35] J. Sotomayor, Generic one parameter families of vector fields on two dimensional manifolds, Publ. Math. I.H.E.S., to appear.

[36] _____, Generic bifurcations of Dynamical Systems, Dynamical Systems, ed. M. Peixoto, Academic Press, N. Y., 1973, 561-582.

[37] S. Sternberg, Local contractions and a theorem of Poincaré, Amer. J. Math. 79 (1957), 809-824.

[38] _____, On the structure of local homeomorphisms of Euclidean n-space II, ibid 80 (1958), 623-631.

[39] F. Takens, Singularities of vector fields, to appear.

[40] R. Thom, Stabilité Structurelle et Morphogénèse, Benjamin, N. Y., 1972.

[41] R. Williams, The "DA" maps of Smale and structural stability, Global Analysis, Proc. Symp. Pure Math. 14, Amer. Math. Soc., Providence, R. I., 1970, 329-335.

[42] _____, Classification of subshifts of finite type, Ann. of Math. 98 (1973), 120-153.