ESAIM: MODÉLISATION MATHÉMATIQUE ET ANALYSE NUMÉRIQUE

SERGE PIPERNO

L^2-stability of the upwind first order finite volume scheme for the Maxwell equations in two and three dimensions on arbitrary unstructured meshes

ESAIM: Modélisation mathématique et analyse numérique, tome 34, nº 1 (2000), p. 139-158

<http://www.numdam.org/item?id=M2AN_2000__34_1_139_0>

© SMAI, EDP Sciences, 2000, tous droits réservés.

L'accès aux archives de la revue « ESAIM: Modélisation mathématique et analyse numérique » (http://www.esaim-m2an.org/) implique l'accord avec les conditions générales d'utilisation (http://www.numdam.org/conditions). Toute utilisation commerciale ou impression systématique est constitutive d'une infraction pénale. Toute copie ou impression de ce fichier doit contenir la présente mention de copyright.

NUMDAM

Article numérisé dans le cadre du programme
Numérisation de documents anciens mathématiques
http://www.numdam.org/

Mathematical Modelling and Numerical Analysis M2AN, Vol. 34, N° 1, 2000, pp. 139–158
Modélisation Mathématique et Analyse Numérique

L^2-STABILITY OF THE UPWIND FIRST ORDER FINITE VOLUME SCHEME FOR THE MAXWELL EQUATIONS IN TWO AND THREE DIMENSIONS ON ARBITRARY UNSTRUCTURED MESHES

SERGE PIPERNO[1]

Abstract. We investigate sufficient and possibly necessary conditions for the L^2 stability of the upwind first order finite volume scheme for Maxwell equations, with metallic and absorbing boundary conditions. We yield a very general sufficient condition, valid for any finite volume partition in two and three space dimensions. We show this condition is necessary for a class of regular meshes in two space dimensions. However, numerical tests show it is not necessary in three space dimensions even on regular meshes. Stability limits for time and space schemes with higher orders of accuracy are numerically investigated.

Résumé. Nous cherchons à établir des conditions suffisantes et éventuellement nécessaires de stabilité L^2 pour le schéma en volumes finis décentré du premier ordre, appliqué aux équations de Maxwell, avec des conditions aux limites absorbantes et métalliques. En deux et trois dimensions d'espace, nous proposons une condition suffisante de stabilité d'une grande généralité, puisqu'elle est valable pour toute forme de volumes finis. En deux dimensions, nous montrons que cette condition est également nécessaire pour une classe de maillages réguliers. En trois dimensions, des tests numériques montrent que cette condition n'est pas nécessaire, même pour des maillages réguliers. Nous recherchons les limites de stabilité observées numériquement pour des schémas plus précis en temps et en espace.

Mathematics Subject Classification. 65M12, 65M60, 78-08.

Received: January 28, 1999. Revised: July 22, 1999.

1. INTRODUTION

After an era of domination by frequency-domain integral equation techniques (mainly the method of moments [23]), the modeling of systems involving electromagnetic waves has known a kind of "reinvention" [22] via direct time integration on space grids. Many numerical methods have then been used for the resolution of the time-domain Maxwell equations. Besides Finite Difference Time-Domain (FDTD) methods based on the Yee scheme [28] or on implicit time schemes [19], some Finite Volume Time-Domain (FVTD) methods or even Finite Element Time-Domain methods have been proposed recently [1, 16], which had already been developed for Computational Fluid Dynamics decades ago. Contrary to finite difference methods, finite volume methods and finite element methods based on unstructured meshes fit naturally complex geometries [7]. Finite element

Keywords and phrases. Electromagnetism, finite volume methods, L^2 stability, energy methods, unstructured meshes, absorbing boundary condition, metallic boundary condition.

[1] CERMICS, INRIA, B.P. 93, 06902 Sophia-Antipolis Cedex, France. e-mail: `Serge.Piperno@sophia.inria.fr`

© EDP Sciences, SMAI 2000

methods induce heavy computations of mass matrices, whereas finite volume methods get rid of differential operators (and finite element mass matrices) using Green's formula for the integration over finite volumes (see [8] for a good review of numerical methods used in Computational Electromagnetics (CEM)).

We are interested here in FVTD methods, as have been developed in the past years, not necessarily on body-fitted coordinates [20, 21] but on unstructured finite element triangulations [5–7, 18] or on totally destructured meshes [3]. More precisely, we consider a standard finite volume approximation, *i.e.* a piecewise constant, discontinuous, Galerkin-type finite element approximation [15], and a first order upwind flux splitting, first developed in one space dimension [13], and available for any Friedrichs system in any dimension. As the Maxwell system in transient state is hyperbolic and may be rewritten in conservative form, it is natural to use a numerical approximation based on conservative upwind schemes. The convergence of this type of scheme has been established for different hyperbolic equations in any dimension [10], and L^1 error estimates of $h^{1/2}$ (where h is a characteristic mesh size) have been proved recently for a general hyperbolic equation [25].

The stability of finite volume schemes has been investigated since many years. For regular, structured grids, several methodologies are available. The most commonly used is due to von Neumann and based on Fourier modes [2]. It gives a result on the L^2 stability of a numerical scheme. The modified equation analysis [27] yields similar results – the amplification/damping of the regular solution of the modified equation – but is also only valid on regular grids. Both analyses do not deal with boundary conditions. The modified equation analysis is purely local, whereas the von Neumann analysis deals with equations posed on infinite domains or domains with periodic boundary conditions. Finally, the concept of Total Variation Diminishing (TVD) scheme, proposed by Harten [12], leads to L^∞-stability results for finite volume schemes on non regular grids only in one space dimension.

In this paper, we investigate the L^2-stability of finite volume schemes in two and three space dimensions on unstructured meshes, for the numerical solution of the time-domain Maxwell equations. We aim at determining the L^2-stability limit on the time step, when first order upwind fluxes and the first order forward Euler time scheme are used. Stability results on arbitrary finite volumes are available only in the case of the upwind first order scheme: the same sufficient stability condition was established for the linear Maxwell equations (mentioned in [3]) and for Friedrichs' systems in general [26]. We prove in this paper a twice weaker stability condition on the time step, which has been used actually on unstructured triangular finite volume partitions [3]. This study is first done in two space dimensions for transverse magnetic (TM) waves – all proofs and results hold for transverse electric waves – and then in the most general case in three space dimensions (in a homogeneous medium). Finite volumes of arbitrary shape are considered, as well as two types of boundary conditions (absorbing and metallic boundary conditions). The energy-type method used in this paper is drawn from some finite element proofs [4].

Since first order schemes are very dissipative, they can not be actually used for the transient solution of Maxwell equations. The energy method presented in this paper can be used to prove a sufficient condition for the L^2-stability of a new second order (in time and space) finite volume scheme for the Maxwell equations on arbitrary finite volumes [17]. Higher order accuracy can also be achieved using the Monotonic Upwind Scheme for Conservation Laws method (MUSCL) [24], and the stability limits of second order and third order schemes are numerically investigated in the last section of this paper.

This paper is organized has follows. In Section 2, for Maxwell equations in two space dimensions (TM waves), a sufficient stability condition is given for the finite volume method (first-order accurate upwind fluxes, first-order forward Euler time scheme) on an arbitrary polygonal finite volume partition, with absorbing and metallic boundary conditions. We prove that this sufficient condition is also necessary for a certain class of regular meshes. In Section 3, the proof in the 2D case is extended to three space dimensions. The condition is compared to the result of Vila and Villedieu [26] and extended to a family of implicit schemes. Finally, in Section 4, numerical results are presented. For the two-dimensional case on different types of finite volumes, the sufficient stability condition of the first order upwind scheme is compared with the actual stability limit of the numerical method. In three space dimensions, we show that the sufficient condition established for arbitrary polyhedral finite volumes is not necessary for regular grids. The stability limit of higher order schemes based on the MUSCL interpolation are also numerically tested.

2. The two-dimensional case

2.1. The two-dimensional Maxwell equations (TM)

We consider the two-dimensional Maxwell system (TM waves) in a homogeneous linear isotropic medium (constant electric permittivity ϵ, magnetic permeability μ and light speed c given by $\epsilon\mu c^2 = 1$). The three unknowns E_z, H_x and H_y, respectively the vertical electric field and the two components of the horizontal magnetic field are solution of the following partial differential equations:

$$\begin{cases} \epsilon \dfrac{\partial E_z}{\partial t} = \dfrac{\partial H_y}{\partial x} - \dfrac{\partial H_x}{\partial y}, \\ \mu \dfrac{\partial H_x}{\partial t} = -\dfrac{\partial E_z}{\partial y}, \\ \mu \dfrac{\partial H_y}{\partial t} = \dfrac{\partial E_z}{\partial x}. \end{cases}$$

These equations are set on a polygonal bounded domain Ω of $\mathbb{R}^2$. Everywhere on the domain boundary $\partial\Omega$, exactly one of the two possible boundary conditions is set: a metallic boundary condition (on $\partial\Omega_m$, around a metallic object or inside a cavity for example) or an absorbing boundary condition (on $\partial\Omega_a$, possibly on the outer boundary of the domain $\partial\Omega_\infty$, see Fig. 1).

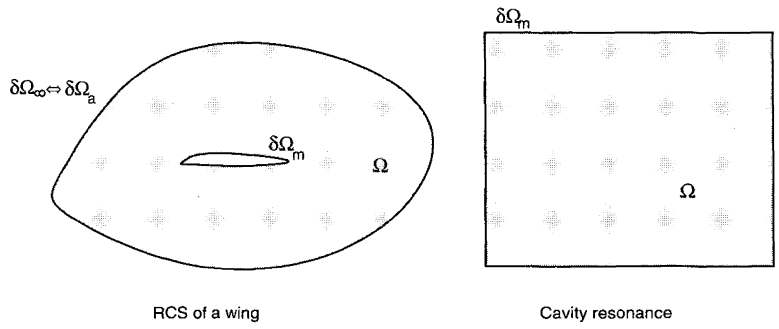

FIGURE 1. Domain Ω and domain boundary.

For the TM waves in two space dimensions, the metallic boundary condition reduces to $E_z = 0$. The absorbing boundary condition considered here is the first-order Silver-Müller condition, which reduces for TM waves to $E_z = c\mu\,(n_y H_x - n_x H_y)$, where $\vec{n} = {}^t(n_x, n_y)$ is the unitary outward direction considered.

Introducing new variables u, v and w by

$$\begin{cases} E_z = \mu u, \\ H_x = \dfrac{v}{c}, \\ H_y = \dfrac{w}{c}, \end{cases}$$

we get the following first order hyperbolic system

$$\frac{\partial W}{\partial t} + A_x \frac{\partial W}{\partial x} + A_y \frac{\partial W}{\partial y} = 0, \text{ with } W = \begin{pmatrix} u \\ v \\ w \end{pmatrix},$$

where the symmetric matrices A_x and A_y are given by

$$A_x = \begin{pmatrix} 0 & 0 & -c \\ 0 & 0 & 0 \\ -c & 0 & 0 \end{pmatrix}, \qquad A_y = \begin{pmatrix} 0 & c & 0 \\ c & 0 & 0 \\ 0 & 0 & 0 \end{pmatrix}.$$

This system is strictly hyperbolic, since for any couple $(\alpha, \beta) \neq (0,0)$, the matrix $\alpha A_x + \beta A_y$ is diagonalizable in $\mathbb{R}$, with distinct eigenvalues equal to

$$\begin{cases} \rho_0 = 0, \\ \rho_+ = c\sqrt{\alpha^2 + \beta^2}, \\ \rho_- = -c\sqrt{\alpha^2 + \beta^2}. \end{cases}$$

In terms of the new variables (u, v, w), the metallic boundary condition on $\partial\Omega_m$ writes $u = 0$ and the absorbing boundary condition corresponding to the unitary outward direction $\vec{n} = {}^t(n_x, n_y)$ writes $u - n_y v + n_x w = 0$.

2.2. The upwind first order finite volume scheme in 2D

2.2.1. *Introduction*

We assume we dispose of an arbitrary partition of the domain Ω into a finite number of connected polygonal finite volumes (each one with a finite number of edges). For example, this assumption covers the two cases of vertex-centered and element-centered finite volumes [6]. For each finite volume or "cell" $\mathcal{T}_i$, V_i denotes its area. We call interface between two finite volumes their intersection, whenever it is a polygonal line. For each internal interface $a_{ij} = \mathcal{T}_i \bigcap \mathcal{T}_j$, we denote by $\vec{n}_{ij}$ the integral over the interface of the unitary normal, oriented from $\mathcal{T}_i$ towards $\mathcal{T}_j$. The same definitions are extended to boundary interfaces (in the intersection of the domain boundary $\partial\Omega_m \bigcup \partial\Omega_a$ with a boundary finite volume), the index j corresponding to a fictitious cell outside the domain. Finally, we denote by $\mathcal{V}_i$ the set of indices of finite volumes neighboring the finite volume $\mathcal{T}_i$ (having an interface in common). The conservative finite volume scheme is written:

$$V_i \frac{W_i^{n+1} - W_i^n}{\Delta t} + \sum_{j \in \mathcal{V}_i} F_{ij} = 0, \tag{1}$$

where the index i is linked to the cell $\mathcal{T}_i$, Δt is the time step and W_i^n is an approximate for the average of W over the cell $\mathcal{T}_i$ at time t^n. In the sequel, superscripts ^{n} are omitted whenever the explicit forward Euler scheme is considered. The upwind first order numerical fluxes F_{ij} are given for internal interfaces by

$$F_{ij} = M_{ij}{}^+ W_i + M_{ij}{}^- W_j, \tag{2}$$

where $\pm$ superscripts stand for positive and negative parts of a matrix by means of diagonalization and the matrix M_{ij} is given by

$$M_{ij} = A_x n_{ijx} + A_y n_{ijy}, \text{ with } \vec{n}_{ij} = (n_{ijx}, n_{ijy}). \tag{3}$$

For a boundary interface, the missing value W_j in the fictitious cell is given by

$$\begin{cases} \text{interface in } \partial\Omega_m\text{:} & W_j \equiv \bar{W}_i = C_{ij} W_i, \\ \text{interface in } \partial\Omega_a\text{:} & W_j \equiv \bar{W}_i = 0, \end{cases} \tag{4}$$

with

$$C_{ij} \equiv C = \begin{pmatrix} -1 & 0 & 0 \\ 0 & 1 & 0 \\ 0 & 0 & 1 \end{pmatrix}. \tag{5}$$

On the metallic boundary $\partial\Omega_m$, the missing value W_j in the fictitious cell is the mirror state for the boundary condition $u = 0$, whereas on the absorbing boundary $\partial\Omega_a$, the first-order Silver-Müller condition is applied in a weak variational way in the boundary flux (incoming waves are not taken into account). The consistency of this weak treatment is more clearly justified by the following general expression of the flux for any W:

$$M_{ij}W = M_{ij}{}^{+}W \quad + \quad \frac{c}{2}\left(u - \frac{n_{ijy}}{\|\vec{n}_{ij}\|}v + \frac{n_{ijx}}{\|\vec{n}_{ij}\|}w\right)\begin{pmatrix} -\|\vec{n}_{ij}\| \\ n_{ijy} \\ n_{ijx} \end{pmatrix}.$$

2.2.2. *Matricial properties*

For each interface a_{ij}, let $\tilde{M}_{ij}$ be the matrix such that

$$M_{ij} = c\|\vec{n}_{ij}\|\tilde{M}_{ij}. \tag{6}$$

The following elementary equalities hold:

$$\vec{n}_{ji} = -\vec{n}_{ij}, \qquad M_{ji} = -M_{ij}, \qquad \tilde{M}_{ji} = -\tilde{M}_{ij}. \tag{7}$$

At the same time, geometrical properties hold for each cell $\mathcal{T}_i$:

$$\sum_{\text{interfaces of } \mathcal{T}_i} \vec{n}_{ij} = \vec{0}, \qquad \sum_{\text{interfaces of } \mathcal{T}_i} M_{ij} = 0. \tag{8}$$

The matrix $\tilde{M}_{ij}$ is diagonalizable, with eigenvalues $\lambda_0 = 0$, $\lambda_+ = 1$ and $\lambda_- = -1$, corresponding respectively to the orthogonal eigenvectors

$$W_{ij}^0 = \begin{pmatrix} 0 \\ \tilde{n}_{ijx} \\ \tilde{n}_{ijy} \end{pmatrix}, W_{ij}^+ = \begin{pmatrix} 1 \\ \tilde{n}_{ijy} \\ -\tilde{n}_{ijx} \end{pmatrix}, W_{ij}^- = \begin{pmatrix} -1 \\ \tilde{n}_{ijy} \\ -\tilde{n}_{ijx} \end{pmatrix},$$

where $\tilde{n}_{ijx}$ and $\tilde{n}_{ijy}$ are the components of the normalized normal $\vec{\tilde{n}}_{ij} = \vec{n}_{ij}/\|\vec{n}_{ij}\|$. The positive and negative parts of $\tilde{M}_{ij}$ are given by

$$\tilde{M}_{ij}^{\pm} = \begin{pmatrix} \pm\frac{1}{2} & \frac{\tilde{n}_{ijy}}{2} & -\frac{\tilde{n}_{ijx}}{2} \\ \frac{\tilde{n}_{ijy}}{2} & \pm\frac{\tilde{n}_{ijy}^2}{2} & \mp\frac{\tilde{n}_{ijx}\tilde{n}_{ijy}}{2} \\ -\frac{\tilde{n}_{ijx}}{2} & \mp\frac{\tilde{n}_{ijx}\tilde{n}_{ijy}}{2} & \pm\frac{\tilde{n}_{ijx}^2}{2} \end{pmatrix} = \pm\frac{1}{2}W_{ij}^{\pm}\,{}^tW_{ij}^{\pm}.$$

We have the following remarkable identities:

$$\left|\tilde{M}_{ij}\right| = \tilde{M}_{ij}^+ - \tilde{M}_{ij}^-, \quad \tilde{M}_{ij}^+ + \tilde{M}_{ij}^- = \tilde{M}_{ij}, \quad \tilde{M}_{ij}^{\pm}\tilde{M}_{ij}^{\pm} = \pm\tilde{M}_{ij}^{\pm}, \quad \tilde{M}_{ij}^+\tilde{M}_{ij}^- = 0. \tag{9}$$

2.2.3. *Energy estimates*

We aim at giving and proving a necessary and/or sufficient condition for the L^2-stability of the upwind first order finite volume scheme (1–3) with boundary treatments (4-5). We use an energy approach, where a quadratic form plays the role of a Lyapunov function of the unknowns W_i. We propose the following discrete energy, directly derived from the expression of the total electromagnetic energy:

$$\mathcal{E}^n = \sum_i V_i {}^t W_i^n \, W_i^n. \tag{10}$$

We investigate under which condition(s) this energy is non-increasing. In that case, the conclusion that the scheme is stable is straightforward, since the energy is a symmetric definite positive quadratic form of all numerical unknowns. We propose for the energy variation $\Delta\mathcal{E} = \mathcal{E}^{n+1} - \mathcal{E}^n$ the:

Lemma 2.1. Using the scheme (1–5), we have $\Delta\mathcal{E} = -\Delta t.T_1 + \Delta t^2.T_2$, where

$$T_1 = \sum_{\text{interfaces}}^{\text{internal}} {}^t\Delta W_{ij} \, |M_{ij}| \, \Delta W_{ij} \; + \sum_{\text{interfaces}}^{\text{metallic}} c\|\vec{n}_{ij}\| \; {}^t W_i D_{ij} \; W_i \; + \sum_{\text{interfaces}}^{\text{absorbing}} {}^t W_i \, |M_{ij}| \, W_i,$$

$$D_{ij} = \begin{pmatrix} 2 & 0 & 0 \\ 0 & 0 & 0 \\ 0 & 0 & 0 \end{pmatrix} \text{ and } T_2 = \sum_i \frac{1}{V_i} \left\| \sum_{j\in\mathcal{V}_i} \left[M_{ij}^- \Delta W_{ij} \right] \right\|^2,$$

and W_j denotes the fictitious state (4) for metallic and absorbing boundary interfaces, $\Delta W_{ij} = W_j - W_i$ and the notation $\|X\|^2$ in the expression of T_2 stands for ${}^t X X$.

Proof. We use another expression of numerical fluxes F_{ij}:

$$F_{ij} = c\|\vec{n}_{ij}\| \left(\tilde{M}_{ij}^+ W_i + \tilde{M}_{ij}^- W_j \right) = \frac{c}{2} \, \|\vec{n}_{ij}\| \, \left[\tilde{M}_{ij}(W_i + W_j) - \left| \tilde{M}_{ij} \right| \Delta W_{ij} \right].$$

Using the same notations (fictitious state $\bar{W}_j$ and $\|X\|^2 = {}^t X X$), we get easily:

$$\begin{aligned} \Delta\mathcal{E} \;=\; & \sum_i -c\Delta t \sum_{j\in\mathcal{V}_i} \|\vec{n}_{ij}\| {}^t W_i \left[\tilde{M}_{ij}(W_i + W_j) - \left| \tilde{M}_{ij} \right| \Delta W_{ij}) \right] \\ & + \sum_i \frac{c^2 \Delta t^2}{4 V_i} \left\| \sum_{j\in\mathcal{V}_i} \|\vec{n}_{ij}\| \, \left[\tilde{M}_{ij}(W_i + W_j) - \left| \tilde{M}_{ij} \right| \Delta W_{ij} \right] \right\|^2. \end{aligned}$$

The terms T_1 and T_2 appear naturally. The terms of T_1 can be reorganized in sums by interface. Terms can be paired for each internal interface a_{ij}, which yields

$$\begin{aligned} T_1 \;=\; & \sum_{\text{interfaces}}^{\text{internal}} c\|\vec{n}_{ij}\| \begin{bmatrix} {}^t W_i \left[\tilde{M}_{ij}(W_i + W_j) - \left| \tilde{M}_{ij} \right| \Delta W_{ij} \right] + \\ {}^t W_j \left[\tilde{M}_{ji}(W_j + W_i) - \left| \tilde{M}_{ji} \right| \Delta W_{ji} \right] \end{bmatrix} \\ & + \sum_{\text{interfaces}}^{\text{metallic}} 2c\|\vec{n}_{ij}\| \left[{}^t W_i \left(\tilde{M}_{ij}^+ W_i + \tilde{M}_{ij}^- C \, \bar{W}_i \right) \right] \\ & + \sum_{\text{interfaces}}^{\text{absorbing}} c\|\vec{n}_{ij}\| \left[{}^t W_i \tilde{M}_{ij} W_i + {}^t W_i \left| \tilde{M}_{ij} \right| W_i \right]. \end{aligned}$$

Elementary recombinations (including interfaces of the metallic boundary $\partial\Omega_m$) yield

$$\begin{aligned} T_1 &= \sum_{\text{interfaces}}^{\text{internal}} \left[{}^tW_i M_{ij} W_i + {}^tW_j M_{ji} W_j + {}^t\Delta W_{ij}\, |M_{ij}|\, \Delta W_{ij}\right] \\ &+ \sum_{\text{interfaces}}^{\text{metallic}} \left[{}^tW_i M_{ij} W_i + c\|\vec{n}_{ij}\| {}^tW_i D_{ij} W_i\right] \\ &+ \sum_{\text{interfaces}}^{\text{absorbing}} \left[{}^tW_i M_{ij} W_i + {}^tW_i\, |M_{ij}|\, W_i\right], \end{aligned}$$

where, for metallic interfaces, D_{ij} is the symmetric part of the matrix $|\tilde{M}_{ij}| + (\tilde{M}_{ij} - |\tilde{M}_{ij}|)C$ and is equal to the value given in the lemma. Using the second property of (8), we have

$$0 = \sum_{\text{cells } i} {}^tW_i \left[\sum_{j\in\mathcal{V}_i} M_{ij}\right] W_i = \sum_{\text{interfaces}}^{\text{internal}} \left[{}^tW_i M_{ij} W_i + {}^tW_j M_{ji} W_j\right] + \sum_{\partial\Omega_m \bigcup \partial\Omega_a}^{\text{interfaces of}} \left[{}^tW_i M_{ij} W_i\right],$$

which yields the correct development for the term T_1. The second equality of (8) inside each cell and the definition of M_{ij}^- are used to obtain the global result for T_2. We have:

$$\begin{aligned} T_2 &= \sum_i \frac{1}{4V_i} \left\| \sum_{j\in\mathcal{V}_i} \left[M_{ij}(W_i + W_j) - |M_{ij}|\, \Delta W_{ij}\right] \right\|^2 \\ &= \sum_i \frac{1}{4V_i} \left\| \sum_{j\in\mathcal{V}_i} \left[M_{ij}(-W_i + W_j) - |M_{ij}|\, \Delta W_{ij}\right] \right\|^2 = \sum_i \frac{1}{V_i} \left\| \sum_{j\in\mathcal{V}_i} \left[M_{ij}^- \Delta W_{ij}\right] \right\|^2. \end{aligned}$$

This concludes the proof of the lemma.

2.3. A sufficient stability condition in 2D

We propose the following stability:

Theorem 2.1. *Using the scheme (1–5) on arbitrary polygonal finite volumes as described in this section, the energy $\mathcal{E}^n$ defined in (10) is non-increasing, and therefore the scheme is L^2-stable, if the time step Δt is such that*

$$c\Delta t \le \min_{T_i} \frac{2V_i}{P_i}, \quad \textit{with } P_i = \sum_{j\in\mathcal{V}_i} \|\vec{n}_{ij}\|.$$

Proof. We first derive an upper bound for the term T_2 in Lemma 2.1. We use the following equality, which is easily obtained:

$$M_{ij}^- M_{ik}^- = \frac{c^2 \|\vec{n}_{ij}\| \|\vec{n}_{ik}\|}{4} \left(1 + \vec{\tilde{n}}_{ij}.\vec{\tilde{n}}_{ik}\right) W_{ij}^- \, {}^tW_{ik}^-. \tag{11}$$

For each term X_i, defined relatively to the cell $\mathcal{T}_i$ by $X_i = \left\| \sum_{j\in\mathcal{V}_i} M_{ij}^- \Delta W_{ij} \right\|^2$, we get

$$\begin{aligned} X_i &= \sum_{(j,k)\in\mathcal{V}_i^2} {}^t\Delta W_{ij}\ M_{ij}^- M_{ik}^-\ \Delta W_{ik} \\ &= \sum_{(j,k)\in\mathcal{V}_i^2} \frac{c^2\|\vec{n}_{ij}\|\|\vec{n}_{ik}\|}{4}\left(1+\vec{\tilde{n}}_{ij}.\vec{\tilde{n}}_{ik}\right)\ {}^t\Delta W_{ij}\ W_{ij}^-\ {}^tW_{ik}^-\ \Delta W_{ik} \\ &= \sum_{(j,k)\in\mathcal{V}_i^2} \frac{c^2\|\vec{n}_{ij}\|\|\vec{n}_{ik}\|}{4}\left(1+\vec{\tilde{n}}_{ij}.\vec{\tilde{n}}_{ik}\right)\ \left({}^tW_{ij}^-\ \Delta W_{ij}\right)\left({}^tW_{ik}^-\ \Delta W_{ik}\right). \end{aligned}$$

Since the terms $1+\vec{\tilde{n}}_{ij}.\vec{\tilde{n}}_{ik}$ involving normalized normals are positive, using a "$2xy \le x^2+y^2$"-type inequality yields

$$\begin{aligned} X_i &\le \sum_{(j,k)\in\mathcal{V}_i^2} \frac{c^2\|\vec{n}_{ij}\|\|\vec{n}_{ik}\|}{8}\left(1+\vec{\tilde{n}}_{ij}.\vec{\tilde{n}}_{ik}\right)\ \left[\left({}^tW_{ij}^-\ \Delta W_{ij}\right)^2+\left({}^tW_{ik}^-\ \Delta W_{ik}\right)^2\right] \\ &= \sum_{(j,k)\in\mathcal{V}_i^2} \frac{c^2\|\vec{n}_{ij}\|\|\vec{n}_{ik}\|}{4}\left(1+\vec{\tilde{n}}_{ij}.\vec{\tilde{n}}_{ik}\right)\ \left[{}^t\Delta W_{ij}\ \left(-\tilde{M}_{ij}^-\right)\ \Delta W_{ij}+{}^t\Delta W_{ik}\ \left(-\tilde{M}_{ik}^-\right)\ \Delta W_{ik}\right] \\ &= \sum_{j\in\mathcal{V}_i}\left(\left[{}^t\Delta W_{ij}\left(-\tilde{M}_{ij}^-\right)\Delta W_{ij}\right]\sum_{k\in\mathcal{V}_i}\frac{c^2\|\vec{n}_{ij}\|\|\vec{n}_{ik}\|}{2}\left(1+\vec{\tilde{n}}_{ij}.\vec{\tilde{n}}_{ik}\right)\right) \\ &= \frac{1}{2}\sum_{j\in\mathcal{V}_i}\left(\left[{}^t\Delta W_{ij}\left(-M_{ij}^-\right)\Delta W_{ij}\right]\left[cP_i+c\,\vec{\tilde{n}}_{ij}.\sum_{k\in\mathcal{V}_i}\vec{n}_{ik}\right]\right)=\frac{cP_i}{2}\sum_{j\in\mathcal{V}_i}{}^t\Delta W_{ij}\left(-M_{ij}^-\right)\Delta W_{ij}. \end{aligned}$$

A sum on all cells yields an interesting upper bound for T_2:

$$T_2 \le \sum_i \frac{cP_i}{2V_i}\sum_{j\in\mathcal{V}_i}\left[{}^t\Delta W_{ij}\left(-M_{ij}^-\right)\Delta W_{ij}\right]. \tag{12}$$

The sum by cell can be split into a sum by interface. Using the definitions of W_j for boundary interfaces (4-5), we get

$$\begin{aligned} T_2 \le & -\sum_{\text{interfaces}}^{\text{internal}} {}^t\Delta W_{ij}\left[\frac{cP_i\Delta t^2}{2V_i}M_{ij}^-+\frac{cP_j\Delta t^2}{2V_j}M_{ji}^-\right]\Delta W_{ij} \\ & -\sum_{\text{interfaces of }\partial\Omega_m}^{\text{metallic}} {}^tW_i\begin{pmatrix}-2&0&0\\0&0&0\\0&0&0\end{pmatrix}\left[\frac{cP_i\Delta t^2}{2V_i}M_{ij}^-\right]\begin{pmatrix}-2&0&0\\0&0&0\\0&0&0\end{pmatrix}W_i \\ & -\sum_{\text{interfaces of }\partial\Omega_a}^{\text{absorbing}} {}^tW_i\left[\frac{cP_i\Delta t^2}{2V_i}M_{ij}^-\right]W_i. \end{aligned}$$

Adding the terms for T_1 given by Lemma 2.1 and using the diagonalization matrices T_{ij} of the symmetric M_{ij} (*i.e.* $M_{ij} = {}^tT_{ij}\Lambda_{ij}T_{ij}$, with $\Lambda_{ij} = \mathrm{diag}\,(0,\ c\|\vec{n}_{ij}\|,\ -c\|\vec{n}_{ij}\|)$), we finally get

$$\begin{aligned}
\Delta\mathcal{E} \ \leq\ & c\Delta t \sum_{\text{interfaces}}^{\text{internal}} \|\vec{n}_{ij}\|\,{}^t\Delta W_{ij}\,{}^tT_{ij} \begin{pmatrix} 0 & 0 & 0 \\ 0 & \dfrac{c\Delta t P_j}{2V_j} - 1 & 0 \\ 0 & 0 & \dfrac{c\Delta t P_i}{2V_i} - 1 \end{pmatrix} T_{ij}\Delta W_{ij} \\
& + c\Delta t \sum_{\text{interfaces of } \partial\Omega_m}^{\text{metallic}} \|\vec{n}_{ij}\|\,{}^tW_i \begin{pmatrix} \dfrac{c\Delta t P_i}{V_i} - 2 & 0 & 0 \\ 0 & 0 & 0 \\ 0 & 0 & 0 \end{pmatrix} W_i \\
& + c\Delta t \sum_{\text{interfaces of } \partial\Omega_a}^{\text{absorbing}} \|\vec{n}_{ij}\|\,{}^tW_i\,{}^tT_{ij} \begin{pmatrix} 0 & 0 & 0 \\ 0 & -1 & 0 \\ 0 & 0 & \dfrac{c\Delta t P_i}{2V_i} - 1 \end{pmatrix} T_{ij}W_i.
\end{aligned}$$

Thus, under the condition of Theorem 2.1, the energy variation $\Delta\mathcal{E}$ is negative and the discrete energy $\mathcal{E}^n$ is non-increasing. Then the scheme is L^2-stable. The discrete energy is bounded and all numerical unknowns as well.

2.4. Optimality of the sufficient stability condition on regular meshes

It is uneasy to prove the instability of a scheme by means of energy estimates. Even if the energy can increase, no conclusion can be drawn because the evolution matrix for the field W (see matrix $\mathbf{A}$ in (19)) is not symmetric. However, one can show that the sufficient condition of Theorem 2.1 is also necessary for a class of regular meshes (with $\Omega = \mathbb{R}^2$ or with periodic boundary conditions). We have the following:

Proposition 2.1. *We consider a finite volume partition for which*
(i) a red or green color can be laid on cells, such that neighboring cells have different colors,
(ii) the following uniformity is required: $\exists\ (P, V)$ *such that* $(\forall \mathcal{T}_i,\ V_i/P_i = V/P)$.
Then the scheme (1-2-3) is unstable if $c\Delta t > 2V/P$.

Proof: Let us introduce the following particular field

$$W_i = \begin{cases} W_r \equiv {}^t(1,\ 0,\ 0), & \text{if } \mathcal{T}_i \text{ is green,} \\ W_v \equiv {}^t(-1,\ 0,\ 0), & \text{if } \mathcal{T}_i \text{ is red.} \end{cases}$$

Assuming the mesh is infinite or periodic boundary conditions are set (with identification of corresponding vertices), elementary calculations prove that, if $(\forall i,\ W_i^n = W_i)$, then $(\forall i,\ W_i^{n+1} = \lambda W_i^n)$, with $\lambda = 1 - c\Delta t P/V$. Hence, the field is clearly amplified (λ is real), and the scheme is unstable as soon as $c\Delta t > 2V/P$.

This result is valid for regular rectangular finite volumes, for the triangular finite volumes resulting from a diagonal, uniform or alternate cut in a regular rectangular mesh, and for other regular triangular meshes as shown in Figure 2. The sufficient and necessary condition of Theorem 2.1 and Proposition 2.1 is equivalent to the condition proposed by Depeyre [9] for uniform $\Delta x \times \Delta y$ rectangular finite volumes:

$$\frac{c\Delta t}{\Delta x} + \frac{c\Delta t}{\Delta y} \leq 1.$$

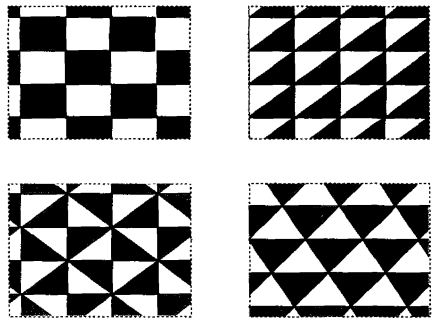

FIGURE 2. Examples of regular meshes with colored cells.

3. THE THREE-DIMENSIONAL CASE

This section has many similarities with the previous one. Many definitions, although they differ from the two-dimensional case, could be straightforwardly deduced in three space dimensions. We have chosen to shorten definitions and proofs whenever it is possible.

3.1. Equations

We now consider Maxwell equations in three space dimensions (homogeneous linear isotropic medium with no source, with parameters ϵ, μ, with $\epsilon\mu c^2 = 1$). The vector field $V = {}^t(E_x, E_y, E_z, H_x, H_y, H_z)$ verifies:

$$\begin{cases} \epsilon \dfrac{\partial E_x}{\partial t} = \dfrac{\partial H_z}{\partial y} - \dfrac{\partial H_y}{\partial z}, \\ \epsilon \dfrac{\partial E_y}{\partial t} = \dfrac{\partial H_x}{\partial z} - \dfrac{\partial H_z}{\partial x}, \\ \epsilon \dfrac{\partial E_z}{\partial t} = \dfrac{\partial H_y}{\partial x} - \dfrac{\partial H_x}{\partial y}, \\ \mu \dfrac{\partial H_x}{\partial t} = \dfrac{\partial E_y}{\partial z} - \dfrac{\partial E_z}{\partial y}, \\ \mu \dfrac{\partial H_y}{\partial t} = \dfrac{\partial E_z}{\partial x} - \dfrac{\partial E_x}{\partial z}, \\ \mu \dfrac{\partial H_z}{\partial t} = \dfrac{\partial E_x}{\partial y} - \dfrac{\partial E_y}{\partial x}. \end{cases}$$

As previously, equations are posed in a bounded domain Ω, with two kinds of boundary conditions, a metallic condition $\vec{n} \times \vec{E} = \vec{0}$ or a first-order Silver-Müller absorbing condition (in the unitary outwards direction $\vec{n}$), *i.e.*

$$\vec{n} \times \vec{E} = -c\mu\, \vec{n} \times \left(\vec{n} \times \vec{H}\right). \tag{13}$$

Using the variables

$$W = {}^t\left(\frac{E_x}{\mu}, \frac{E_y}{\mu}, \frac{E_z}{\mu}, cH_x, cH_y, cH_z\right), \tag{14}$$

the Maxwell system can be transformed into

$$\frac{\partial W}{\partial t} + A_x \frac{\partial W}{\partial x} + A_y \frac{\partial W}{\partial y} + A_z \frac{\partial W}{\partial z} = 0,$$

where the symmetric matrices A_x, A_y and A_z are given (using $\bar{c} = -c$) by

$$A_x = \begin{pmatrix} 0 & 0 & 0 & 0 & 0 & 0 \\ 0 & 0 & 0 & 0 & 0 & c \\ 0 & 0 & 0 & 0 & \bar{c} & 0 \\ 0 & 0 & 0 & 0 & 0 & 0 \\ 0 & 0 & \bar{c} & 0 & 0 & 0 \\ 0 & c & 0 & 0 & 0 & 0 \end{pmatrix}, \quad A_y = \begin{pmatrix} 0 & 0 & 0 & 0 & 0 & \bar{c} \\ 0 & 0 & 0 & 0 & 0 & 0 \\ 0 & 0 & 0 & c & 0 & 0 \\ 0 & 0 & c & 0 & 0 & 0 \\ 0 & 0 & 0 & 0 & 0 & 0 \\ \bar{c} & 0 & 0 & 0 & 0 & 0 \end{pmatrix}, \quad A_z = \begin{pmatrix} 0 & 0 & 0 & 0 & c & 0 \\ 0 & 0 & 0 & \bar{c} & 0 & 0 \\ 0 & 0 & 0 & 0 & 0 & 0 \\ 0 & \bar{c} & 0 & 0 & 0 & 0 \\ c & 0 & 0 & 0 & 0 & 0 \\ 0 & 0 & 0 & 0 & 0 & 0 \end{pmatrix}.$$

This system is (non strictly) hyperbolic, since for any non-zero vector $\vec{n} = {}^t(n_x, n_y, n_z)$, the matrix $n_x A_x + n_y A_y + n_z A_z$ is diagonalizable in $\mathbb{R}$, with three double eigenvalues equal to

$$\begin{cases} \rho_0 = 0, \\ \rho_+ = c\sqrt{n_x^2 + n_y^2 + n_z^2}, \\ \rho_- = -c\sqrt{n_x^2 + n_y^2 + n_z^2}. \end{cases}$$

3.2. The upwind first order finite volume scheme in 3D

We assume we dispose of an arbitrary partition of the domain Ω into a finite number of connected polyhedral finite volumes (each one with a finite number of faces). For each cell $\mathcal{T}_i$, V_i represents its volume. The definition of cell interfaces a_{ij} (which are now polyhedral surfaces), normals $\vec{n}_{ij}$ and normalized normal $\vec{\tilde{n}}_{ij}$ can be derived exactly like in two dimensions, as well as fictitious cells for boundary interfaces. The conservative finite volume scheme is again written as in (1), where W_i^n is an approximate for the average of W, now defined in (14), over the cell $\mathcal{T}_i$ at time t^n. The matrix M_{ij} in the upwind first order numerical fluxes (2) is now given by

$$M_{ij} = A_x n_{ijx} + A_y n_{ijy} + A_z n_{ijz}, \text{ with } \vec{n}_{ij} = (n_{ijx}, n_{ijy}, n_{ijz}). \tag{15}$$

For all interfaces a_{ij}, the definition of $\tilde{M}_{ij}$ (6) and the properties (7-8-9) still hold.

For a metallic boundary interface (condition $\vec{n_{ij}} \times \vec{E} = \vec{0}$), the missing value W_j in the fictitious cell is still given given by (4) where the matrix C_{ij} is now given by

$$C_{ij} = \begin{pmatrix} -I_3 + 2\, \vec{\tilde{n}_{ij}}\, {}^t\vec{\tilde{n}_{ij}} & 0_3 \\ 0_3 & I_3 \end{pmatrix}, \tag{16}$$

where 0_3 and I_3 are respectively the zero and identity 3×3 matrices (the tensor $\vec{\tilde{n}_{ij}}\, {}^t\vec{\tilde{n}_{ij}}$ being also a 3×3 matrix). It is clear that the metallic boundary condition is enforced in a weak variational way, since the electric field $\vec{E}$ at the boundary, nearly equal to the first three components of $\mu(\bar{W}_i + W_i)/2$, is actually parallel to $\vec{n_{ij}}$.

On the absorbing boundary, the first-order Silver-Müller condition is again applied in a weak variational way in the boundary flux (incoming waves are not taken into account), *i.e.* $W_j = 0$.

For energy estimates, we proceed exactly like in Section 2.2.3 for the two-dimensional case. The Lemma 2.1, giving the energy variation $\Delta\mathcal{E} = \mathcal{E}^{n+1} - \mathcal{E}^n$, still holds, with the following new expression for D_{ij}:

$$D_{ij} = \begin{pmatrix} 2\Pi_{ij} & 0_3 \\ 0_3 & 0_3 \end{pmatrix},$$

where $\Pi_{ij} = \vec{t}_{ij}\,{}^t\vec{t}_{ij} + \vec{t}\vec{t}_{ij}\,{}^t\vec{t}\vec{t}_{ij}$ is the tangent projector on the considered metallic boundary interface. Actually, D_{ij} in the expression above is again equal to the symmetric part of the matrix $|\tilde{M}_{ij}| + (\tilde{M}_{ij} - |\tilde{M}_{ij}|)C_{ij}$, where C_{ij} is now given in (16).

3.3. A sufficient stability condition in 3D

We propose the following stability:

Theorem 3.1. *Using the scheme (1-2-15-4-16) on arbitrary polyhedral finite volumes as described in this section, the energy $\mathcal{E}^n$ defined in (10) is non-increasing, and therefore the scheme is L^2-stable, if the time step Δt is such that*

$$c\Delta t \leq \min_{\mathcal{T}_i} \frac{2V_i}{P_i}, \quad \textit{with } P_i = \sum_{j\in\mathcal{V}_i} \|\vec{n}_{ij}\|.$$

Proof. The proof is very similar to the proof of the Theorem 2.1 for the two-dimensional case. The derivation of an upper bound for the term T_2 in Lemma 2.1 requires a three-dimensional version of the equality (11), given in the following:

Lemma 3.1. We have

$$M_{ij}^- \; M_{ik}^- = \frac{c^2\|\vec{n}_{ij}\|\|\vec{n}_{ik}\|}{4}\left(1 + \vec{\tilde{n}}_{ij}.\vec{\tilde{n}}_{ik}\right)\left[W_{ijk}^{-a}{}^t W_{ikj}^{-a} + W_{ijk}^{-b}{}^t W_{ikj}^{-b}\right],$$

where the state vectors W_{ijk}^{-a}, W_{ijk}^{-b}, W_{ikj}^{-a}, W_{ikj}^{-b} are given by

$$\begin{aligned} W_{ijk}^{-a} &= {}^t(\vec{t}_{ijk}, \vec{t}_{ijk} \times \vec{\tilde{n}}_{ij}), & W_{ikj}^{-a} &= {}^t(\vec{t}_{ijk}, \vec{t}_{ijk} \times \vec{\tilde{n}}_{ik}), \\ W_{ijk}^{-b} &= {}^t(\vec{\tilde{n}}_{ij} \times \vec{t}_{ijk}, \vec{t}_{ijk}), & W_{ikj}^{-b} &= {}^t(\vec{\tilde{n}}_{ik} \times \vec{t}_{ijk}, \vec{t}_{ijk}), \end{aligned}$$

where $\vec{t}_{ijk}$ is a unitary vector, orthogonal to both $\vec{\tilde{n}}_{ij}$ and $\vec{\tilde{n}}_{ik}$.

Proof. The symmetric matrix $\tilde{M}_{ij}$ is diagonalizable, with double eigenvalues $\lambda_0 = 0$, $\lambda_+ = 1$ and $\lambda_- = -1$. The vectors W_{ijk}^{-a} and W_{ijk}^{-b} (resp. W_{ikj}^{-a} and W_{ikj}^{-b}) are orthogonal eigenvectors of $\tilde{M}_{ij}$ (resp. $\tilde{M}_{ik}$) for the eigenvalue $\lambda_- = -1$. Then it is easy to show that

$$\tilde{M}_{ij}^- = -\frac{1}{2}\left[W_{ijk}^{-a}{}^t W_{ijk}^{-a} + W_{ijk}^{-b}{}^t W_{ijk}^{-b}\right], \tag{17}$$

$$\tilde{M}_{ik}^- = -\frac{1}{2}\left[W_{ikj}^{-a}{}^t W_{ikj}^{-a} + W_{ikj}^{-b}{}^t W_{ikj}^{-b}\right]. \tag{18}$$

Noticing that ${}^t W_{ijk}^{-a} W_{ikj}^{-a} = {}^t W_{ijk}^{-b} W_{ikj}^{-b} = 1 + \vec{\tilde{n}}_{ij}.\vec{\tilde{n}}_{ik}$ and ${}^t W_{ijk}^{-a} W_{ikj}^{-b} = {}^t W_{ijk}^{-b} W_{ikj}^{-a} = 0$, we easily get the announced result for $M_{ij}^- \; M_{ik}^-$, which completes the proof of the lemma.

Again, for each term $X_i = \left\|\sum_{j\in\mathcal{V}_i} M_{ij}^- \Delta W_{ij}\right\|^2$, we have

$$\begin{aligned} X_i &= \sum_{(j,k)\in\mathcal{V}_i^2} {}^t\Delta W_{ij} \; M_{ij}^- M_{ik}^- \; \Delta W_{ik} = \sum_{(j,k)\in\mathcal{V}_i^2} c^2\|\vec{n}_{ij}\|\|\vec{n}_{ik}\| \; {}^t\Delta W_{ij} \; \tilde{M}_{ij}^- \tilde{M}_{ik}^- \; \Delta W_{ik}, \\ &= \sum_{(j,k)\in\mathcal{V}_i^2} \frac{c^2\|\vec{n}_{ij}\|\|\vec{n}_{ik}\|}{4}\left(1 + \vec{\tilde{n}}_{ij}.\vec{\tilde{n}}_{ik}\right)\left[\left({}^t W_{ijk}^{-a}\Delta W_{ij}\right)\left({}^t W_{ikj}^{-a}\Delta W_{ik}\right) + \left({}^t W_{ijk}^{-b}\Delta W_{ij}\right)\left({}^t W_{ikj}^{-b}\Delta W_{ik}\right)\right]. \end{aligned}$$

As in the two-dimensional case, the terms $1+\vec{\tilde{n}}_{ij}.\vec{\tilde{n}}_{ik}$ involving normalized normals are positive. The use of two "$2xy \leq x^2+y^2$"-type inequalities and the recomposition of the matrices $\tilde{M}_{ij}^-$ and $\tilde{M}_{ik}^-$ using (17-18) yield easily

$$X_i \leq \frac{c}{2}\sum_{j\in\mathcal{V}_i}\left([{}^t\Delta W_{ij}\left(-M_{ij}^-\right)\Delta W_{ij}][P_i+\ \vec{\tilde{n}}_{ij}.\sum_{k\in\mathcal{V}_i}\vec{n}_{ik}]\right) = \frac{cP_i}{2}\sum_{j\in\mathcal{V}_i}{}^t\Delta W_{ij}\left(-M_{ij}^-\right)\Delta W_{ij}.$$

A sum on all cells yields the same upper bound for T_2 as in (12). The sum by cell for T_2 can be split into a sum by interfaces. Using the definitions of W_j for boundary interfaces (4-16) and the diagonalization of M_{ij} ($M_{ij} = {}^tT_{ij}\Lambda_{ij}T_{ij}$, with $\Lambda_{ij} = \mathrm{diag}(0,0,c\|\vec{n}_{ij}\|,c\|\vec{n}_{ij}\|,-c\|\vec{n}_{ij}\|,-c\|\vec{n}_{ij}\|)$), we finally get

$$\begin{aligned}
\Delta\mathcal{E} \ \leq\ & c\Delta t\sum_{\text{interfaces}}^{\text{internal}}\|\vec{n}_{ij}\|{}^t\Delta W_{ij}{}^tT_{ij}\begin{pmatrix} 0_2 & 0_2 & 0_2\\ 0_2 & \left(\frac{c\Delta tP_j}{2V_j}-1\right)I_2 & 0_2\\ 0_2 & 0_2 & \left(\frac{c\Delta tP_i}{2V_i}-1\right)I_2\end{pmatrix}T_{ij}\Delta W_{ij}\\
& +c\Delta t\sum_{\text{interfaces of }\partial\Omega_m}^{\text{metallic}}\|\vec{n}_{ij}\|\left(\frac{cP_i\Delta t}{V_i}-2\right){}^tW_i\begin{pmatrix}\Pi_{ij} & 0_3\\ 0_3 & 0_3\end{pmatrix}W_i\\
& +c\Delta t\sum_{\text{interfaces of }\partial\Omega_a}^{\text{absorbing}}\|\vec{n}_{ij}\|{}^tW_i{}^tT_{ij}\begin{pmatrix} 0_2 & 0_2 & 0_2\\ 0_2 & -I_2 & 0_2\\ 0_2 & 0_2 & \left(\frac{c\Delta tP_i}{2V_i}-1\right)I_2\end{pmatrix}T_{ij}W_i.
\end{aligned}$$

Thus, under the condition of Theorem 3.1, the energy variation $\Delta\mathcal{E}$ is negative and the discrete energy $\mathcal{E}^n$ is non-increasing. Then the scheme is L^2-stable. The discrete energy is bounded and all numerical unknowns as well.

3.4. Complements

3.4.1. *Comparison with another stability result*

The stability condition of Theorem 3.1 can be compared with another theoretical general result presented by Vila and Villedieu [26]. They show that a L^2-stability is achieved under a condition yielding a twice smaller limit time step than the conditions proposed in this paper. One can show that their condition, for the Maxwell system in three dimensions, yields a certain monotonicity property to the scheme (the concepts of total variation [12] or local extrema [14] diminishing schemes being unavailable for systems in more than one dimensions). The present monotonicity is given in the following:

Proposition 3.1. *Using the scheme (1-2-15-4-16), under the condition $c\Delta t \leq \min_{\mathcal{T}_i}\frac{V_i}{P_i}$, with P_i defined in Theorem 3.1, each state vector is transformed into a "convex" combination of neighboring states, i.e.*

$$\begin{cases} W_i^{n+1} = N_{ii}W_i^n + \sum_{j\in\mathcal{V}_i}N_{ij}W_j^n,\\ \forall i,\ \mathbb{I}_6 = N_{ii}+\sum_{j\in\mathcal{V}_i}N_{ij},\\ \forall i,\ \forall j\in\mathcal{V}_i,\ N_{ii} \text{ and } N_{ij} \text{ are symmetric and positive.}\end{cases}$$

Proof. The finite volume scheme (1) can be rewritten

$$W_i^{n+1} = W_i^n - \frac{\Delta t}{V_i}\sum_{j\in\mathcal{V}_i}\left(M_{ij}^+W_i^n + M_{ij}^-W_j^n\right).$$

We then choose $\forall i,\forall j\in\mathcal{V}_i,\ N_{ij} = -\Delta t/V_i\ M_{ij}^-$ and $\forall i,\ N_{ii} = I_6 - \Delta t/V_i\ \sum_{j\in\mathcal{V}_i}M_{ij}^+$. The matrices N_{ij} and N_{ii} are clearly symmetric and the matrices N_{ij} are positive. Finally, if $c\Delta t \leq \min_{\mathcal{T}_i}\frac{V_i}{P_i}$, the matrices N_{ii} are

also positive, since $\forall i$, $\forall W$, we have:

$$ {}^tWN_{ii}W = {}^tWW - \frac{\Delta t}{V_i}\sum_{j\in\mathcal{V}_i} {}^tWM_{ij}^+W \geq {}^tWW - \frac{\Delta t}{V_i}\sum_{j\in\mathcal{V}_i} c\|\vec{n}_{ij}\|{}^tWW \;\geq\; \left(1-\frac{c\Delta tP_i}{V_i}\right){}^tWW \geq 0. $$

This completes the proof of the proposition.

3.4.2. *Implicit time schemes*

The upwind first order scheme described above can be coupled with an implicit time scheme. Formally, the scheme (1-2) can be written

$$ W^{n+1} = W^n + \Delta t\mathbf{A}W^n, \tag{19} $$

where W^n is an approximate of the field at time t^n and $\mathbf{A}$ is a non-symmetric evolution matrix, depending only on the geometry and the light speed c. Similarly, the discrete energy (10) can be written

$$ \mathcal{E}^n = {}^tW^n\mathbb{E}W^n, $$

where the block-diagonal matrix $\mathbb{E}$ is symmetric definite positive. In terms of matrices, Theorem 2.1 is equivalent to

$$ c\Delta t \leq \min_{T_i}\frac{2V_i}{P_i} \Rightarrow \mathbb{E}\mathbf{A} + \frac{\Delta t}{2}\,{}^t\mathbf{A}\mathbb{E}\mathbf{A} \text{ is negative.} \tag{20} $$

We consider the following family of implicit time schemes:

$$ W^{n+1} = W^n + \Delta t\mathbf{A}W^{n+\theta}, \text{ with } W^{n+\theta} = (1-\theta)W^n + \theta W^{n+1}, \tag{21} $$

where θ is a fixed parameter in $]0,1]$. This time scheme is second-order accurate if $\theta = 1/2$, and first-order accurate otherwise. We have the:

Proposition 3.2. *Using the scheme (1-2-15-4-16) on arbitrary polyhedral finite volumes, with numerical fluxes based on the field $W^{n+\theta}$ as proposed in (21), the energy $\mathcal{E}^n$ defined in (10) is non-increasing, and therefore the scheme is L^2-stable, if the time step Δt is such that*

$$ c\Delta t(1-2\theta) \leq \min_{T_i}\frac{2V_i}{P_i}. $$

The scheme is unconditionally stable if $\theta \geq 1/2$ and at least conditionally stable if $\theta < 1/2$.

Proof. We have successively:

$$ \begin{aligned} W^n &= W^{n+\theta} - \theta\Delta t\mathbf{A}W^{n+\theta}, \\ W^{n+1} &= W^{n+\theta} + (1-\theta)\Delta t\mathbf{A}W^{n+\theta}, \\ \mathcal{E}^{n+1} &= \mathcal{E}^n + 2\Delta t\,{}^tW^{n+\theta}\left[\mathbb{E}\mathbf{A} + \frac{(1-2\theta)\Delta t}{2}\,{}^t\mathbf{A}\mathbb{E}\mathbf{A}\right]W^{n+\theta}. \end{aligned} $$

The conclusion of the proof is based on the implication (20) for $(1-2\theta)\Delta t$ instead of Δt.

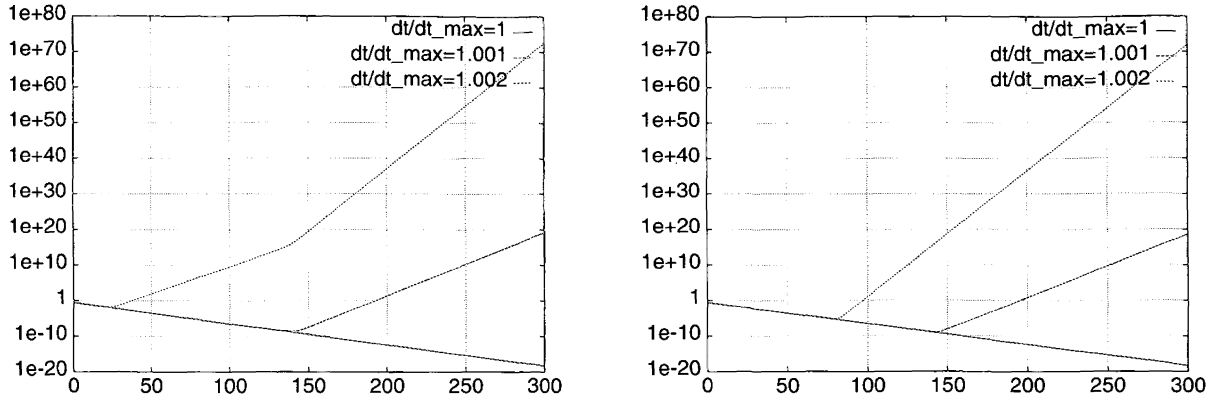

FIGURE 3. Total discrete energy $\mathcal{E}^n$ in function of the time for two regular triangulations.

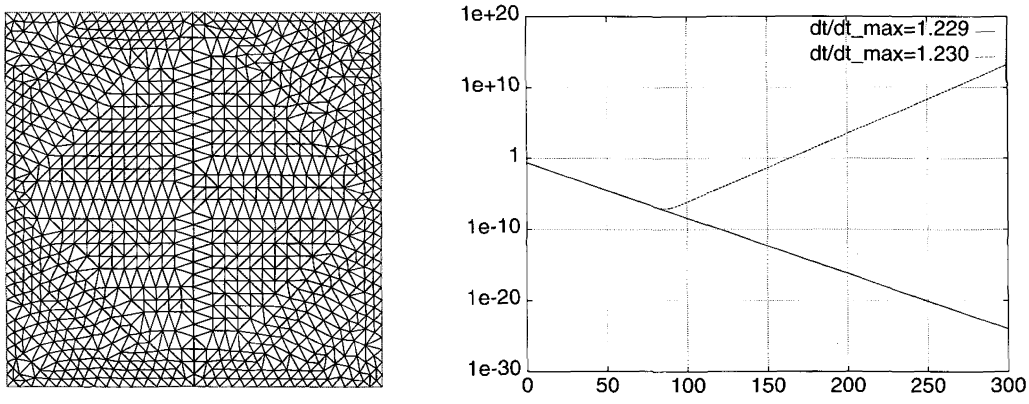

FIGURE 4. $\mathcal{E}^n$ in function of the time (right) for an unstructured triangulation (left).

4. NUMERICAL RESULTS

4.1. The two-dimensional case with TM waves

We consider regular meshes of a square domain, with a metallic boundary condition everywhere on the boundary. The total electromagnetic energy is plotted in function of the time for several numerical simulations with different time steps and finite volumes. Starting from a regular square mesh (30×30 squares), a first triangulation is obtained by cutting (in a constant direction) each rectangle in two triangles (right-top partition in Fig. 2). In the sequel, we denote by $\Delta t_{\max}$ the maximal time step for which the stability condition given by Theorem 2.1 or Theorem 3.1 is achieved. Here, the energy is non-increasing if $\Delta t = \Delta t_{\max}$ and the scheme is clearly unstable above this sufficient and necessary stability limit (see Fig. 3, left). It is also the same if the rectangles are cut in alternative directions, as in the left-bottom partition of Figure 2 (see Fig. 3, right).

For the non-structured triangulation presented in Figure 4, the stability limit for the time step is close to $1.23 \cdot \Delta t_{\max}$, as shown in Figure 4. This is probably due to numerical diffusion and energy dissipation in larger triangles. However, the condition given in Theorem 2.1 is actually sufficient. If the finite volumes are different from triangles, for example median dual cells [6] based on the previous triangulation, a similar result is obtained, with a stability limit around $1.196 \cdot \Delta t_{\max}$ (see Fig. 5).

On structured, regular, rectangular partitions it was also observed that the stability condition given by Theorem 2.1 is necessary and sufficient. For example, for two partitions (30×50 and 30×100 rectangles) of

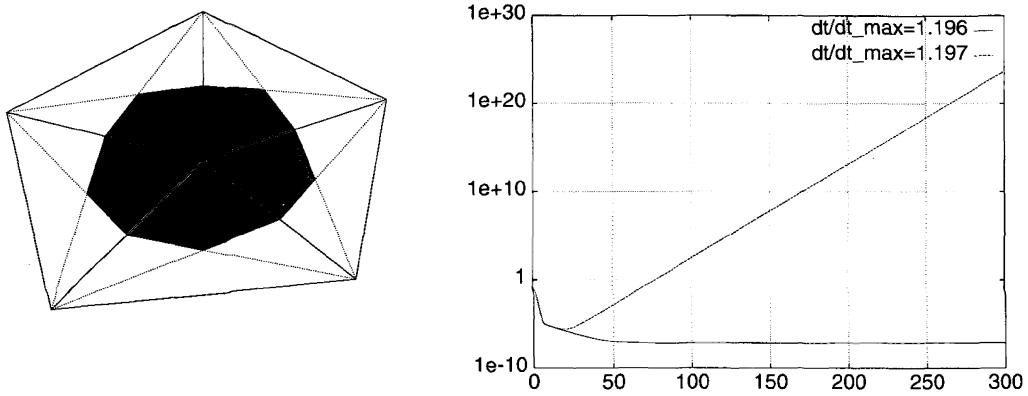

FIGURE 5. $\mathcal{E}^n$ in function of the time (right) for median dual cells (left) in the triangulation of Figure 4.

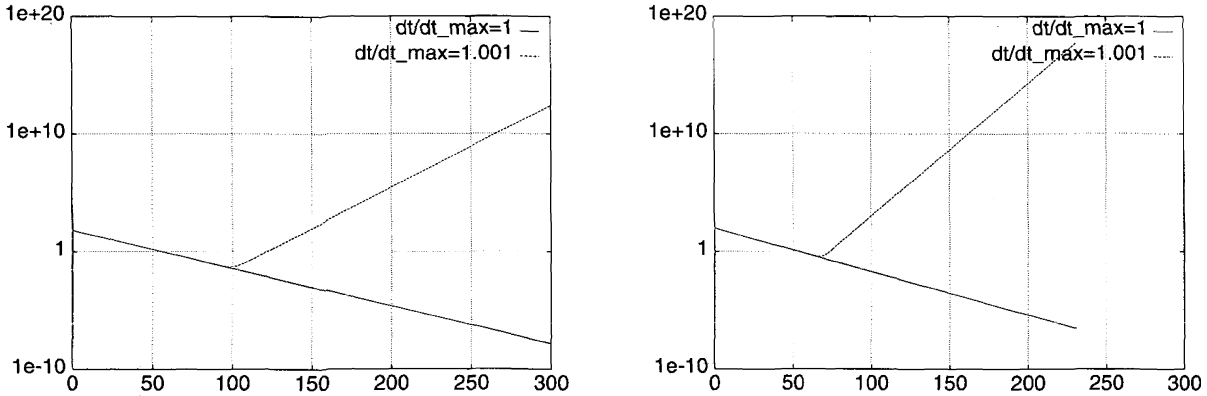

FIGURE 6. $\mathcal{E}^n$ in function of the time for two regular rectangular meshes (30×50 left and 30×100 right).

the unity-square, the total electromagnetic energy is plotted in function of the time for different time steps in Figure 6, and its variation is as announced.

Finally, we have made some numerical tests using time and space schemes with an higher order of accuracy, on structured and unstructured partitions of triangular finite volumes. More precisely, we have considered the extension of the MUSCL method [24] to unstructured triangular meshes [11] with no limitation, for which the numerical fluxes (2) are replaced by $F_{ij} = M_{ij}{}^{+}W_{ij} + M_{ij}{}^{-}W_{ji}$, where W_{ij} and W_{ji} are interpolated states on both sides of the cell interface a_{ij}. In the present case (triangular finite volumes), W_{ij} (and symmetrically W_{ji}) is given by

$$W_{ij} = W_i + \frac{1}{2}\left[(1-\beta)(W_j - W_i) + \beta\ \vec{\nabla}W(\mathcal{T}_i).\vec{G_iG_j}\right],$$

where $\vec{\nabla}W(\mathcal{T}_i)$ denotes an approximate gradient of W on the cell $\mathcal{T}_i$ (see [18] for several possible expressions of the local gradient on triangles), G_i denotes the gravity center of $\mathcal{T}_i$ and finally β is an upwinding parameter. On regular rectangular grids, this spatial scheme is actually second-order accurate and even third order accurate for $\beta = 1/3$.

We have considered the following explicit multi-step Runge-Kutta time schemes with low storage:

$$\begin{cases} W^* &= W^n + \frac{\Delta t}{2}\mathbf{A}W^n \\ W^{n+1} &= W^n + \Delta t\mathbf{A}W^* \end{cases} \quad \text{and} \quad \begin{cases} W^* &= W^n + \dfrac{\Delta t}{3}\mathbf{A}W^n \\ W^{**} &= W^n + \dfrac{\Delta t}{2}\mathbf{A}W^* \\ W^{n+1} &= W^n + \Delta t\ \mathbf{A}W^{**} \end{cases},$$

where $\mathbf{A}$ is the operator defined in (19). These schemes are actually second and third order accurate, since $\mathbf{A}$ is linear. In order to remain coherent, we have tested a "second order scheme" (resp. "third order scheme") based on the second (resp. third) order Runge-Kutta scheme and the MUSCL extension with $\beta = 0.5$ (resp. $\beta = 1/3$).

On a structured partition of triangles, the stability limit observed numerically for the second order scheme is very close to $\Delta t_{\max}$ given in Theorem 2.1. It is shown by total energy plots in Figure 7 (left). One can notice that the total electromagnetic energy is almost constant if $\Delta t = \Delta t_{\max}$. For the third order scheme, the stability limit for Δt is significantly different from $\Delta t_{\max}$: it is around $1.885 \cdot \Delta t_{\max}$ (see Fig. 7 - right).

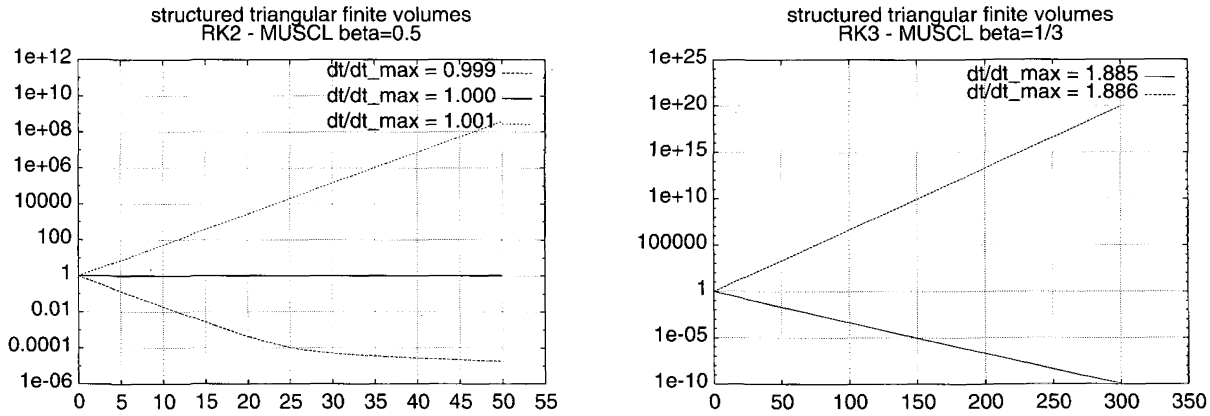

FIGURE 7. $\mathcal{E}^n$ for the second (left) and third (right) order schemes on a regular triangulation.

On the unstructured triangulation of Figure 4 (left), the stability limit observed numerically for the second order scheme is around $1.22 \cdot \Delta t_{\max}$ (see energy plots in Fig. 8, left), which is again very close to the stability limit for the first order upwind finite volume scheme (see Fig. 4, right). For the third order scheme, the stability limit is again significantly different from $1.22 \cdot \Delta t_{\max}$: it is around $2.38 \cdot \Delta t_{\max}$ (see Fig. 8, right).

4.2. The three-dimensional case

We consider regular meshes of the unity-cube in three dimensions, made of rectangular parallelepipedic elements. We use metallic boundary conditions on the whole cube surface. For several grids, characterized by the numbers n_x, n_y and n_z of elements in the three directions (we can assume $n_x < n_y < n_z$ with no loss of generality). Numerical tests are summed up in Figure 9, in which the total electromagnetic energy is plotted in function of the time for different time steps and sets (n_x, n_y, n_z). One can notice that, in all cases, in terms of $\Delta x = 1/n_x$, $\Delta y = 1/n_y$ and $\Delta z = 1/n_z$, the observed limit time step for stability is very close to $\Delta t = \Delta y\ \Delta z/(\Delta y + \Delta z)$. We can prove this condition is necessary for stability: since $\Delta x > \Delta y > \Delta z$, the given Δt is indeed the minimum of the three "two-dimensional" limit time steps based on regular rectangular two-dimensional grids of sizes $\Delta x \times \Delta y$, $\Delta y \times \Delta z$ and $\Delta z \times \Delta x$.

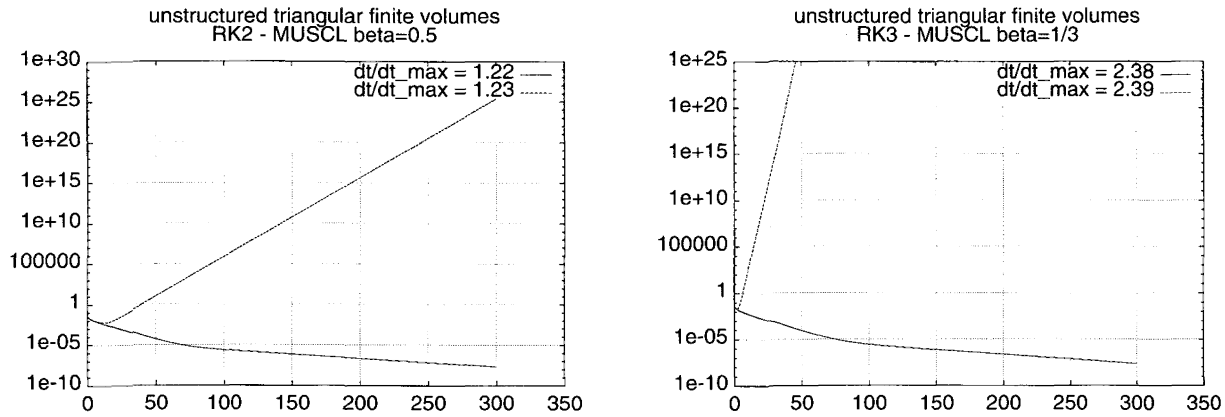

FIGURE 8. $\mathcal{E}^n$ for the second (left) and third (right) order schemes on an unstructured triangulation.

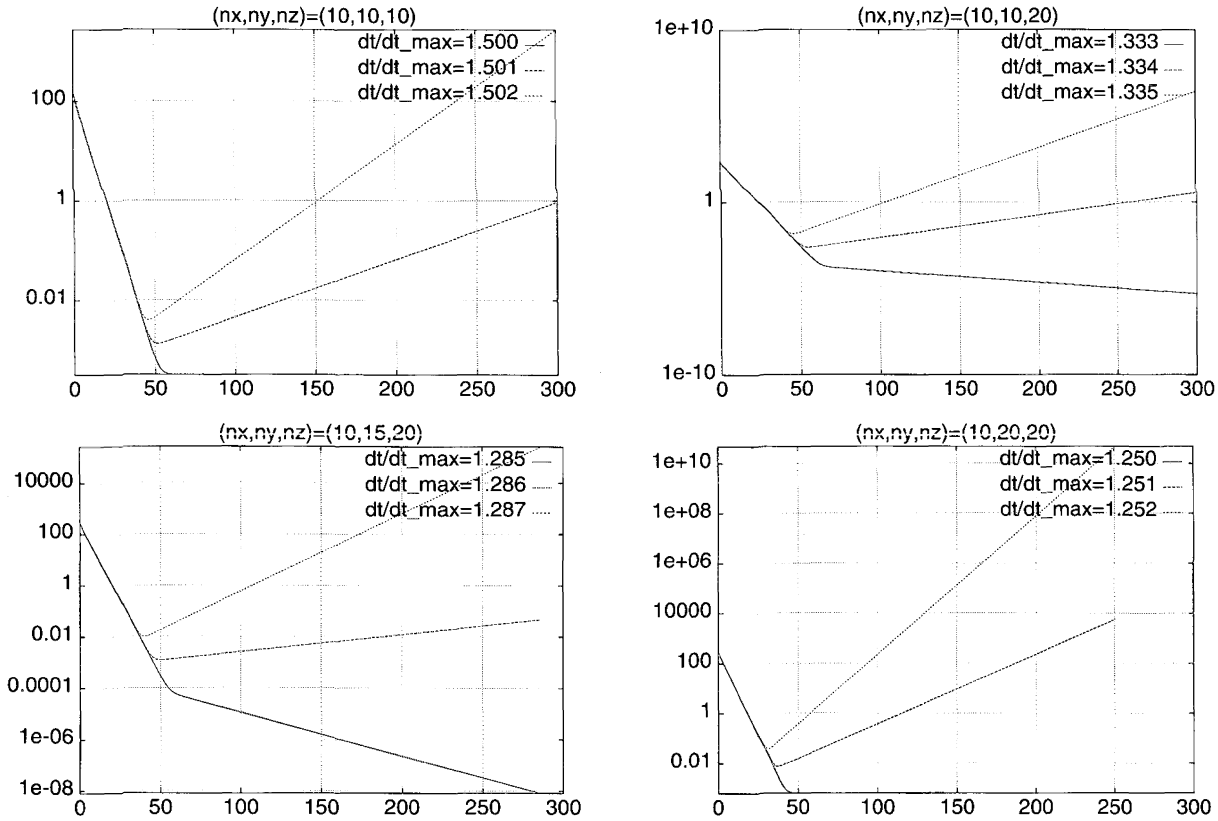

FIGURE 9. $\mathcal{E}^n$ in function of the time for several regular parallelepipedic grids.

On unstructured meshes based on tetrahedra, the upwind first order finite volume scheme has an observed stability limit which is, exactly like in the two-dimensional case, a little larger (with the same order of magnitude) than the stability limit given in Theorem 3.1, probably again because of numerical diffusion in larger finite volumes. Finally, it was observed that the higher order schemes based on the MUSCL method and explicit Runge-Kutta schemes lead to numerical stability limits [7] which are very similar to those in two space dimensions.

5. Conclusion

In this paper, we have proposed a sufficient condition for the stability of the first order upwind finite volume scheme applied to Maxwell equations in two and three dimensions. Energy estimates lead us to sufficient stability conditions on arbitrary finite volumes with metallic or absorbing boundary conditions. The stability condition happens to be also necessary for regular meshes in two dimensions only. Finally, the condition seems to be also sufficient for schemes of higher accuracy in time and space, and an energy-based stability study of these schemes should be the subject of further investigations.

References

[1] J.J. Ambrosiano, S.T. Brandon, R. Löhner and C.R. DeVore, Electromagnetics via the Taylor-Galerkin finite element method on unstructured grids. *J. Comput. Phys.* **110** (1994) 310–319.

[2] D.A. Anderson, J.C. Tannehill and R.H. Pletcher, *Computational fluid mechanics and heat transfer*, Hemisphere, McGraw-Hill, New York (1984).

[3] F. Bourdel, P.-A. Mazet and P. Helluy, Resolution of the non-stationary or harmonic Maxwell equations by a discontinuous finite element method. Application to an E.M.I. (electromagnetic impulse) case. *Computing Methods in Applied Sciences and Engineering.* Nova Science Publishers, Inc., New-York (1991) 405–422.

[4] P.G. Ciarlet and J.-L. Lions Eds., *Handbook of Numerical Analysis*, Vol. 1. North Holland-Elsevier Science Publishers, Amsterdam, New York, Oxford (1991).

[5] J.-P. Cioni, L. Fezoui and H. Steve, Approximation des équations de Maxwell par des schémas décentrés en éléments finis. Technical Report RR-1601, INRIA (1992).

[6] J.-P. Cioni and M. Remaki, Comparaison de deux méthodes de volumes finis en électromagnétisme. Technical Report RR-3166, INRIA (1997).

[7] J.-P. Cioni, L. Fezoui, L. Anne and F. Poupaud, A parallel FVTD Maxwell solver using 3D unstructured meshes, in *13th annual review of progress in applied computational electromagnetics*, Monterey, California (1997).

[8] G. Cohen and P. Joly Eds., *Aspects récents en méthodes numériques pour les équations de Maxwell*, Collection didactique INRIA, INRIA Rocquencourt, France (1998) 23–27.

[9] S. Depeyre, *Étude de schémas d'ordre élevé en volumes finis pour des problèmes hyperboliques. Application aux équations de Maxwell, d'Euler et aux écoulements diphasiques dispersés.* Mathématiques appliquées, ENPC, janvier (1997).

[10] R. Eymard, T. Gallouët and R. Herbin, The finite volume method. in *Handbook for Numerical Analysis*, North Holland-Elsevier Science Publishers, Amsterdam, New York, Oxford (to appear).

[11] L. Fezoui and B. Stoufflet, A class of implicit upwind schemes for euler simulations with unstructured meshes. *J. Comput. Phys.* **84** (1989) 174–206.

[12] A. Harten, High Resolution Schemes for Hyperbolic Conservation Laws. *J. Comput. Phys.* **49** (1983) 357–393.

[13] A. Harten, P. D. Lax and B. van Leer, On upstream differencing and Godunov-type schemes for hyperbolic conservation laws. *SIAM Rev.* **25** (1983) 36–61.

[14] A. Jameson, Artificial diffusion, upwind biasing, limiters and their effect on accuracy and multigrid convergence in transonic and hypersonic flows, in *11th AIAA Computational Fluid Dynamics Conference, Orlando, Florida*, July 6–9 (1993), AIAA paper 93-3359.

[15] P. Lesaint, *Sur la résolution des systèmes hyperboliques du premier ordre par des méthodes d'éléments finis.* Ph.D. thesis, Université de Paris VI, France (1975).

[16] R. Löhner and J. Ambrosiano, A finite element solver for the Maxwell equations, in *GAMNI-SMAI Conference on Numerical Methods for the Maxwell Equations*, Paris, France (1989). SIAM, Philadelphia (1991).

[17] M. Remaki, A new finite volume scheme for solving Maxwell system. Technical Report RR-3725, INRIA (1999).

[18] M. Remaki, L. Fezoui and F. Poupaud, Un nouveau schéma de type volumes finis appliqué aux équations de Maxwell en milieu hétérogène. Technical Report RR-3351, INRIA (1998).

[19] J.S. Shang, A characteristic-based algorithm for solving 3D, time-domain Maxwell equations. In *30th Aerospace Sciences Meeting and Exhibit*, Reno, Nevada, January 6–9 (1992), AIAA paper 92-0452.

[20] J.S. Shang and R.M. Fithen, A comparative study of characteristic-based algorithms for the Maxwell equations. *J. Comput. Phys.* **125** (1996) 378–394.

[21] V. Shankar, W.F. Hall and A.H. Mohammadian, A time-domain differential solver for electromagnetic scattering problems. *Proc. IEEE* **77** (1989) 709–720.

[22] A. Taflove, Re-inventing electromagnetics: supercomputing solution of Maxwell's equations *via* direct time integration on space grids. AIAA paper 92-0333 (1992).

[23] K.R. Umashankar, Numerical analysis of electromagnetic wave scattering and interaction based on frequency-domain integral equation and method of moments techniques. *Wave Motion* **10** (1988) 493.

[24] B. Van Leer, Towards the ultimate conservative difference scheme v: a second-order sequel to Godunov's method. *J. Comput. Phys.* **32** (1979) 361–370.

[25] J.-P. Vila, Convergence and error estimates in finite volume schemes for general multidimensional scalr conservation laws. I. Explicite monotone schemes. *RAIRO Modél. Math. Anal. Numér.* **28** (1994) 267–295.

[26] J.-P. Vila and P. Villedieu, Convergence de la méthode des volumes finis pour les systèmes de Friedrichs. *C.R. Acad. Sci. Paris Sér. I Math.* **3**(325) (1997) 671–676.

[27] R.F. Warming and F. Hyett, The modified equation approach to the stability and accuracy analysis of finite-difference methods. *J. Comput. Phys.* **14** (1974) 159–179.

[28] K.S. Yee, Numerical solution of initial boundary value problems involving Maxwell's equations in isotropic media. *IEEE Trans. Antennas and Propagation* AP-16 (1966) 302–307.