ANNALI DELLA
SCUOLA NORMALE SUPERIORE DI PISA
Classe di Scienze

ROBERT FINN

A limiting geometry for capillary surfaces

Annali della Scuola Normale Superiore di Pisa, Classe di Scienze 4e série, tome 11, nº 3 (1984), p. 361-379

<http://www.numdam.org/item?id=ASNSP_1984_4_11_3_361_0>

© Scuola Normale Superiore, Pisa, 1984, tous droits réservés.

L'accès aux archives de la revue « Annali della Scuola Normale Superiore di Pisa, Classe di Scienze » (http://www.sns.it/it/edizioni/riviste/annaliscienze/) implique l'accord avec les conditions générales d'utilisation (http://www.numdam.org/conditions). Toute utilisation commerciale ou impression systématique est constitutive d'une infraction pénale. Toute copie ou impression de ce fichier doit contenir la présente mention de copyright.

NUMDAM
Article numérisé dans le cadre du programme
Numérisation de documents anciens mathématiques
http://www.numdam.org/

A Limiting Geometry for Capillary Surfaces.

ROBERT FINN

1. – We study here a limiting configuration for capillary surfaces in cylindrical tubes of general section, in the absence of external force (gravity) field. The general question of the influence of boundary geometry on the behavior of solution surfaces was apparently first addressed by Concus and Finn [1], who showed that a surface S simply covering the (base) section Ω and meeting the cylinder walls Z in a prescribed angle γ need not exist, even for convex analytic $\Sigma = \partial\Omega$. These authors obtained as a necessary condition for existence of S the relation

$$\Phi[\Gamma; \gamma] \equiv \Gamma - \Sigma^* \cos\gamma + H_\gamma \Omega^* > 0 \tag{1}$$

for every curve (or family of curves) $\Gamma \subset \Omega$ cutting a subdomain Ω^* from Ω and arc Σ^* from Σ (see fig. 1). Here

$$H_\gamma = \frac{\Sigma}{\Omega} \cos\gamma \tag{2}$$

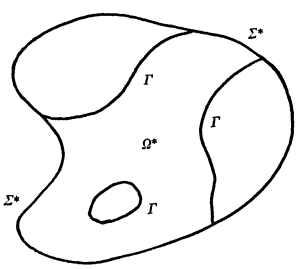

Figure 1.

Pervenuto alla Redazione il 20 Luglio 1983, e in forma definitiva il 28 Dicembre 1983.

is twice the mean curvature of S; we have used the symbols Γ, Σ, ..., to to denote alternatively a set or its measure. It may be assumed without loss of generality that $0 \leqslant \gamma < \pi/2$.

Two fundamental papers on the existence question were published by E. Giusti [2, 3]. In the second of these, Giusti proved that if $\gamma = 0$, then the condition (1) suffices for existence. In the earlier paper, he showed that a solution exists whenever there exists $\varepsilon > 0$ such that

$$\Phi^{\varepsilon}[\Gamma; \gamma] \equiv (1-\varepsilon)\Gamma - \Sigma^* \cos\gamma + H_\gamma \Omega^* > 0 \tag{3}$$

for all $\Gamma \subset \Omega$.

The question was taken up further in [4, 5, 6, 7, 8, 9], also independently from another point of view in [10]. In [8] it was shown that for a piecewise smooth Σ with isolated corners having interior angles not less than 2α, with $\alpha + \gamma > \pi/2$, a condition of the form (3) is a consequence of (1), and thus (1) suffices for existence. (We note that γ cannot be prescribed at a corner; however it can be shown that the values of γ on the smooth part of Σ determine the solution uniquely whenever it exists.)

In the present work, we consider the limiting geometry in which one or more corners can appear, with interior angles α satisfying $\alpha + \gamma = \pi/2$. In such a case (3) always fails, regardless of the validity of (1) or of the remaining geometry. Nevertheless it can happen that a solution exists; a simple example is obtained by choosing for Ω an equilateral triangle. A lower hemisphere whose equatorial circle circumscribes the triangle provides an explicit solution, for which $\alpha + \gamma = \pi/2$.

For a general configuration the answer seems much less immediate; however we intend to show that it is affirmative under reasonable conditions. Specifically, we shall obtain an equi-bound for the areas in a family of solution surfaces corresponding to neighboring boundary conditions; this bound will then be applied to obtain the existence of a solution to the original problem, as a limiting configuration.

The interest in the result derives chiefly from the fact that if at any corner there should hold $\alpha + \gamma < \pi/2$, then no solution surface can exist (Concus and Finn [1]).

2. – For background details we refer the reader to the sources [1, 11, 12, 13, 14]; we mention here only that the problem consists, formally, of finding a solution $u(x)$ in Ω to the equation

$$\operatorname{div} Tu = H_\gamma \tag{4}$$

with

$$Tu = \frac{1}{\sqrt{1 + |Du|^2}} Du \tag{5}$$

such that

$$\nu \cdot Tu = \cos \gamma \tag{6}$$

on Σ. Here ν is exterior unit normal on Σ. When a solution exists, it is unique up to an additive constant and minimizes the variational expression

$$\mathscr{E}[u; \gamma] \equiv \int_\Omega \sqrt{1 + |Du|^2} dx + H_\gamma \int_\Omega u \, dx - \oint_\Sigma u \cos \gamma \, d\sigma \tag{7}$$

in the class $BV(\Omega)$ of functions of bounded total variation in Ω. Conversely, a minimizing function $u \in BV(\Omega)$ for $\mathscr{E}[u; \gamma]$ provides a strict solution of (4), (5) in Ω, which assumes the boundary data in a weak (variational) sense, and which differs at most by an additive constant from a strict solution of (4), (5), (6) whenever such a solution exists (see, *e.g.*, [15] for details). We shall be concerned with solutions in the two dimensional (phusical) case $x = (x_1, x_2)$.

3. – In the interpretation of (1) and (3) as originally introduced, Γ is assumed to lie entirely interior to Ω. However, we may consider formally arcs Γ that need not be simple and that coincide in whole or in part with arcs $\Sigma^* \subset \Sigma$, in every case for which the configuration can be realized by a limit of interior simple arcs Γ that converge, lower semicontinuously in length, with Σ^* converging in length. If we can show that (3) is satisfied for all Γ in the extended sense, then it will hold a fortiori for all Γ in the original sense, and thus the existence theorem will follow. We note that in the extended sense, an arc of Σ may be counted one or more times as part of Γ, but at most once as part of Σ^*. We suppose throughout that Σ is piecewise smooth, in the sense that it be of class C^2 in local coordinates, except possibly at a finite number of exceptional points (vertices) P_j, at each of which two uniformly smooth arcs meet at an interior angle $2\alpha_j$, with $0 < \alpha_j < \pi$. Let $\alpha = \min_j \alpha_j$, let $\gamma_0 = \pi/2 - \alpha$.

HYPOTHESIS $\alpha(\gamma_0)$. *At each vertex P with interior angle α, it is possible to place a lower hemisphere $v(x; \gamma_0)$ of radius $R_{\gamma_0} = 2H_{\gamma_0}^{-1}$, with equatorial circle Q_0 passing through P (as shown in fig. 2) in such a way that at each point of Σ interior to Q_0 and to some neighborhood $\mathcal{N}_P$ of P there holds $\nu \cdot Tv \geqslant \cos \gamma_0$.*

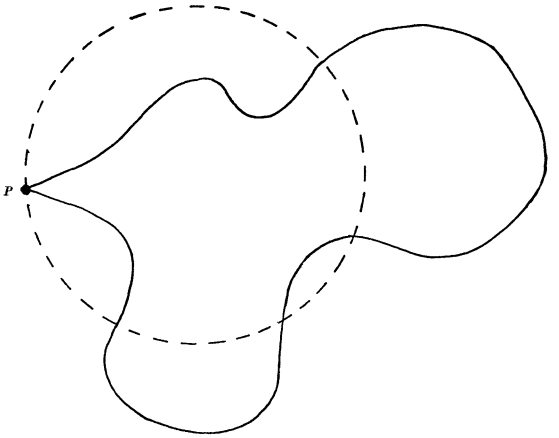

Figure 2.

In other words, it is required that a lower hemisphere of radius R_{γ_0} that is vertical at P should meet the vertical cylinder wall through Σ in an angle not exceeding γ_0 near P. One sees readily that the construction is always possible if Σ contains two straight segments through P or if Γ has on each side of P near P the sense of concavity indicated in the figure. More general configurations are however also admissible.

THEOREM. *If* (1) *holds at* $\gamma = \gamma_0$ *for all* $\Gamma \subset \Omega$, *and if Hypothesis* $\alpha(\gamma_0)$ *is satisfied, then a solution* $u^0(x)$ *of* (4), (5), (6) *exists and minimizes* $\mathscr{E}[u; \gamma_0]$ *in the sense described above. The solution is bounded and regular in* Ω *and the corresponding surface* S_0 *has finite area.*

The indicated bounds are, at least in principle, explicit. We remark that our proof of boundedness differs basically from the one given previously by Gerhardt [20], which does not apply in the present case. For the case considered in [20] the present method yields an overlapping result that is in some respects much more precise.

PROOF OF THE THEOREM. Choose γ in the range $\gamma_0 < \gamma < \pi/2$. Then the conditions of Lemma 2 in [8] are satisfied and we conclude from Giusti's theorem [2] that a solution $u(x; \gamma) = u_\gamma$ exists. We propose to bound the area of the corresponding surface S_γ, independent of γ as $\gamma \searrow \gamma_0$. To do so we modify a procedure due to Giusti [2].

LEMMA 1. *There exists* $\varepsilon(\delta) > 0$ *with the property that if a component of a set* Ω^* *cut off by* Γ *has diameter exceeding* δ, *then* Φ^ε, *restricted to that component, is positive.*

Here « component » is to be understood in the extended sense indicated above.

PROOF. Let us suppose that for each $\varepsilon > 0$ there exists a component Ω^ε of diameter $\geqslant \delta$, for which $\Phi^\varepsilon \leqslant 0$. A typical such component would appear as in fig. 3. Since $\Sigma^* \leqslant \Sigma$, we then have the inequality $\Gamma^\varepsilon < \Sigma$ for the total length of the bounding curves Γ^ε.

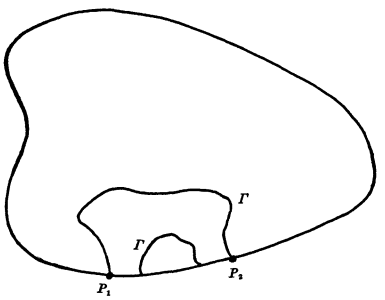

Figure 3.

We assert that the number of boundary components of Ω^ε may be taken to be equibounded. For consider a closed curve $\Gamma^\varepsilon_c \subset \Omega^\varepsilon$, bounding an interior Ω^ε_c. The contribution to Φ^ε of this curve is $(1-\varepsilon)\Gamma^\varepsilon_c - H_\gamma \Omega^\varepsilon_c$. By the isoperimetric inequality

$$(1-\varepsilon)\Gamma^\varepsilon_c - H_\gamma \Omega^\varepsilon_c > \sqrt{\Omega^\varepsilon_c}(2\sqrt{\pi}(1-\varepsilon) - H_\gamma \sqrt{\Omega^\varepsilon_c})$$

so that if $\Omega^\varepsilon_c < 4\pi(1-\varepsilon)^2 H_\gamma^{-2}$ the value of Φ^ε would be decreased on removal of Γ^ε_c. Thus, we may assume that at most a fixed finite number of curves Γ^ε_c appears, each of which is equibounded in length, as $\varepsilon \to 0$. The remainder of the boundary of Ω^ε_c is a simple closed curve consisting partly of portions of Γ^ε and partly of subarcs of Σ, and hence is again equibounded in length. Letting $\varepsilon \to 0$, we obtain an equibounded number of sequences of closed curves, each of which is equibounded in length. If these curves are parametrized by arc length, we obtain an equibounded number of sequences of Lipschitz functions with Lipschitz constant 1, defined on equibounded intervals. Thus there are subsequences of the Γ^ε that converge uniformly, lower semicontinuously in length, to a limiting configuration Γ^0, determining (in a limiting sense) an Ω_0 of diameter $\geqslant \delta$. The associated boundary arcs on Σ^* converge uniformly and also in length, and it follows that $\Phi[\Gamma^0; \gamma] \leqslant 0$.

We assert there exists $\delta^0 > 0$, depending only on δ, such that dia $\Gamma^0 \geqslant \delta^0$. For if dia $\Gamma^0 < \delta_0$ and $\delta^0 < \delta$, then for sufficiently small ε the boundary

component Σ^ε must be the largest arc on Σ cut off by Γ^ε, and will tend to Σ if dia $\Gamma^\varepsilon \to 0$; the corresponding Ω^ε will tend to Ω. Choosing ε so that $(1-\varepsilon) > \cos\gamma$, we have

$$\begin{aligned}\Phi[\Gamma^\varepsilon;\gamma] &= (1-\varepsilon)\Gamma - \Sigma^\varepsilon\cos\gamma + \left(\frac{\Sigma}{\Omega}\cos\gamma\right)\Omega^\varepsilon \\ &= (1-\varepsilon)\Gamma + (\Sigma-\Sigma^\varepsilon)\cos\gamma - \frac{\Sigma}{\Omega}(\Omega-\Omega^\varepsilon)\cos\gamma \\ &> [\Gamma + (\Sigma-\Sigma^\varepsilon) - H_\gamma(\Omega-\Omega^\varepsilon)]\cos\gamma \\ &> \sqrt{\Omega-\Omega^\varepsilon}\left(2\sqrt{\pi} - H_\gamma\sqrt{\Omega-\Omega^\varepsilon}\right)\cos\gamma\end{aligned}$$

by the isoperimetric inequality. Since for sufficiently small δ^0 there holds dia $(\Omega\setminus\Omega^\varepsilon) < \delta_0$ for all small enough ε, we would conclude $\Phi[\Gamma^\varepsilon;\gamma] > 0$, contrary to the construction of Γ^ε.

We thus have, in particular, $\Gamma^0 \neq 0$. We write $\Gamma^0 = \Gamma_1^0 \cap \Gamma_2^0$, with $\Gamma_1^0 = \Gamma^0 \cap \Omega$, $\Gamma_2^0 = \Gamma^0 \cap \Sigma$. In the sense implied by the limiting procedure,

$$\Phi[\Gamma^0;\gamma] = \Gamma_1^0 + \Gamma_2^0 - \Sigma^0\cos\gamma + H_\gamma\Omega^0 \leqslant 0\,, \tag{8}$$

where $\Sigma^0 = \lim_{\varepsilon\to 0}\Sigma^\varepsilon$.

Suppose $\Gamma_1^0 \neq 0$. Letting Ω_1^0 be the part of Ω^0 cut off by Γ_1^0, we set $\Sigma_1^0 = \partial\Omega_1^0 \cap \Sigma$ and find

$$\Sigma^0 = \Sigma_1^0 + \Gamma_2^0 \cap \Sigma^0 - \Gamma_2^0 \cap (\Sigma\setminus\Sigma^0)\,.$$

We thus obtain from (8)

$$\begin{aligned}0 &\geqslant \Gamma_1^0 - \Sigma_1^0\cos\gamma + H_\gamma\Omega_1^0 + \Gamma_2^0 - (\Gamma_2^0\cap\Sigma^0)\cos\gamma \\ &\geqslant \Gamma_1^0 - \Sigma_1^0\cos\gamma + H_\gamma\Omega_0^1 \geqslant \Phi[\Gamma_1^0;\gamma]\,.\end{aligned}$$

Hence there must be at least one component of Ω_1^0 for which the corresponding $\Phi \leqslant 0$, contradicting the hypothesis $\Phi[\Gamma;\gamma] > 0$, $\forall\Gamma \subset \Omega$.

If $\Gamma_1^0 = 0$, then dia $\Gamma_2^0 =$ dia $\Gamma^0 \geqslant \delta^0$, and either $\Omega^0 = 0$ or $\Omega^0 = \Omega$. If $\Omega^0 = 0$, then $\Sigma^0 \leqslant \Gamma_2^0$ and (8) yields

$$0 \geqslant \Gamma_2^0(1-\cos\gamma) \geqslant \delta^0(1-\cos\gamma) > 0\,;$$

if $\Omega^0 = \Omega$, then

$$0 \geqslant \Gamma_2^0 - \Sigma^0\cos\gamma + \left(\frac{\Sigma}{\Omega}\cos\gamma\right)\Omega \geqslant \delta^0 > 0\,,$$

thus completing the proof of the lemma.

LEMMA 2. *There exists $\varepsilon(\delta) > 0$ with the property that if a component Ω^* has distance exceeding δ from every vertex P for which $\alpha + \gamma \leqslant \pi/2$, then Φ^ε corresponding to that component is positive.*

PROOF. In view of Lemma 1, it suffices to restrict attention to Ω^* of (sufficiently) small diameter $\bar{\delta}$. We suppose $\bar{\delta}$ so chosen that for any two points P_1, P_2 on Σ whose distance $\overline{P_1P_2} < 2\bar{\delta}$, the smaller of the two arcs determined on Σ contains at most one vertex P.

Consider a component of Ω^* lying in a ball $B_{\bar{\delta}}$ of radius $\bar{\delta}$, and suppose first that the corresponding Σ^* contains no vertex. If $\Sigma^* = \emptyset$, we set $l = 0$, otherwise let l be the supremum of arc lengths on Σ within $B_{\bar{\delta}}$ joining intersection points with Γ (see fig. 3). This value l will be achieved at points P_1, P_2 on Σ. Given $\bar{\varepsilon} > 0$, $\bar{\delta}$ can be chosen (depending only on $\bar{\varepsilon}$) so that $\Gamma \geqslant \overline{P_1P_2} \geqslant (1-\bar{\varepsilon})l \geqslant (1-\bar{\varepsilon})\Sigma^*$. We choose $\bar{\varepsilon}$ so that $(1-\bar{\varepsilon}) > \cos\gamma$, and then we choose ε so that $(1-\varepsilon)(1-\bar{\varepsilon}) > \cos\gamma$. We then have $\Phi^\varepsilon \geqslant H_\gamma \Omega^* > 0$, as desired.

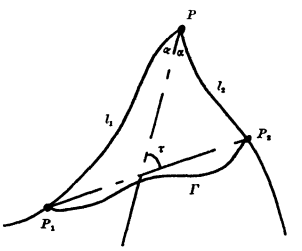

Figure 4.

Suppose next that a vertex $\bar{P}$ appears between P_1 and P_2, with $\bar{\alpha} < \pi/2$, $\bar{\alpha} + \gamma > \pi/2$ (fig. 4). Letting τ be the angle between the angle bisector and the segment $\overline{P_1P_2}$, we find

$$\Gamma \geqslant \overline{P_1P_2} \geqslant (1-\bar{\varepsilon})(l_1 + l_2)\frac{\sin\alpha}{\sin\tau}$$

for given $\bar{\varepsilon} > 0$ if $\bar{\delta}$ is small enough. We have also $\Sigma^* \leqslant (l_1 + l_2)$; thus, since $\bar{\alpha} + \gamma > \pi/2$ we can choose $\bar{\varepsilon}$ and ε so that

$$\Phi^\varepsilon \geqslant (1-\varepsilon)\Gamma - \Sigma^* \cos\gamma \geqslant (l_1 + l_2)\left[(1-\varepsilon)(1-\bar{\varepsilon})\frac{\sin\bar{\alpha}}{\sin\tau} - \cos\gamma\right] > 0 .$$

If $\alpha > \pi/2$, we find $\Gamma \geqslant (1-\bar{\varepsilon})(l_1 + l_2)$, $\Sigma^* \leqslant (l_1 + l_2)$, so it suffices again to have $(1-\varepsilon)(1-\bar{\varepsilon}) > \cos\gamma$.

LEMMA 3. *If Hypothesis $\alpha(\gamma_0)$ holds and if $\gamma_0 < \gamma < \pi/2$, then Hypothesis $\alpha(\gamma)$ holds. The neighborhood $\mathcal{N}_P$ can be chosen to be uniform in γ as $\gamma \searrow \gamma_0$.*

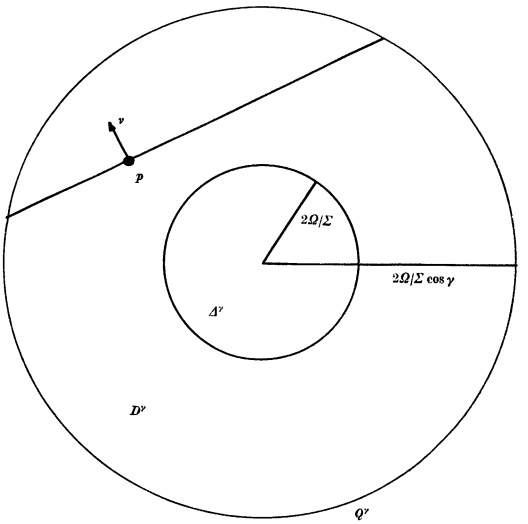

Figure 5.

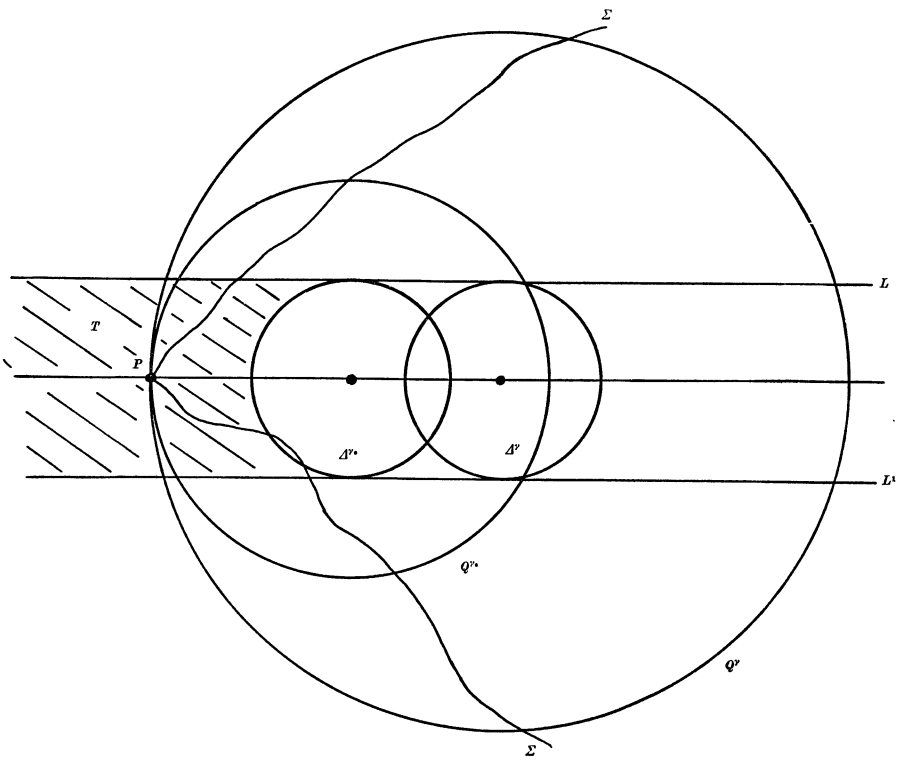

Figure 6.

PROOF. For given γ in $(0, \pi/2)$, consider a disk D^γ of radius $R_\gamma = 2H_\gamma^{-1}$, and let $v(x; \gamma)$ be the lower hemisphere whose equatorial circle $Q^\gamma = \partial D^\gamma$. Let Δ^γ be a concentric disk of radius $R_\gamma \cos\gamma = 2\Omega/\Sigma$. Given $p \in D^\gamma$, there holds $\nu \cdot Tv \geqslant \cos\gamma$ at p if and only if $p \in D^\gamma \setminus \Delta^\gamma$ and the direction ν is orthogonal to a line that does not enter Δ^γ (see fig. 5). This is most easily seen by constructing the two tangents to $\partial\Delta^\gamma$ through p. Each of the vertical planes through these lines meets the hemisphere $v(x; \gamma)$ in the angle γ, so that for the corresponding normals ν to the tangent lines at p there holds $\nu \cdot Tv = \cos\gamma$.

Suppose now that Hypothesis $\alpha(\gamma_0)$ holds, and let Q^{γ_0} be the corresponding circle through P. We construct a circle Q^γ centered on the line joining P with the center of Q^{γ_0}, then the corresponding subcircles $\partial\Delta^{\gamma_0}$, $\partial\Delta^\gamma$, and the common tangents L, L' to these subcircles (fig. 6). In the shaded region T of the figure, any line that meets Δ^γ will also enter Δ^{γ_0}. It follows that at any point $p \in T$, the range of directions ν such that $\nu \cdot Tv^\gamma \geqslant \cos\gamma$ includes those for which $\nu \cdot Tv^{\gamma_0} \geqslant \cos\gamma_0$. Since T contains some $\mathcal{N}_P(\gamma_0) \neq \emptyset$ by hypothesis, the lemma is proved.

4. – We return to the proof of the theorem. Consider the solution u_γ as above; we normalize u_γ so that $u_\gamma > 0$, and set

$$\Omega^t = \{(x, y) \in \Omega\colon\ u_\gamma \geqslant t\}\,.$$

Letting ε and δ be as in Lemma 1, we set

$$t_\varepsilon = \inf\{t\colon\ \operatorname{dia}\Omega^t < \delta\}\,.$$

By Theorem 2.2 of [2] (see also [10]) $t_\varepsilon < \infty$.

For every vertex P at which $\alpha + \gamma = \pi/2$, we introduce a circular arc $\mathscr{C}_{3\delta}$ about P in Ω of radius 3δ, as indicated in fig. 7. Here δ is to be sufficiently small that the condition of Hypothesis α is satisfied in each wedge $D_{3\delta}$ cut off at a vertex P by $\mathscr{C}_{3\delta}$. If $t \geqslant t_\varepsilon$, then each component of Ω^t that contacts $\mathscr{C}_{3\delta}$ or lies outside every such wedge has distance $> \delta$ from P, hence $\Phi^\varepsilon > 0$ for all such components, by Lemma 2.

Let W_δ be the open component lying in some $D_{3\delta}$ and con taining D_δ, such that W_δ contains no points of $\mathscr{C}_{3\delta}$ and no points of components of Ω^{t_ε} that contact $\mathscr{C}_{3\delta}$. W_δ is bounded by P, by segments $T_\delta \subset \Sigma$, and by a set $\Gamma_\delta \subset \Omega$, on which $u_\gamma \leqslant t_\varepsilon$.

We now position a lower hemisphere $v(x; \gamma)$ as described in Hypothesis $\alpha(\gamma)$ (see Lemma 3) and choose c_ε such that $w_\varepsilon = v(x, y) + c_\varepsilon \geqslant t_\varepsilon$ on Γ_δ. By the maximum principle for surfaces of prescribed mean curvature (see,

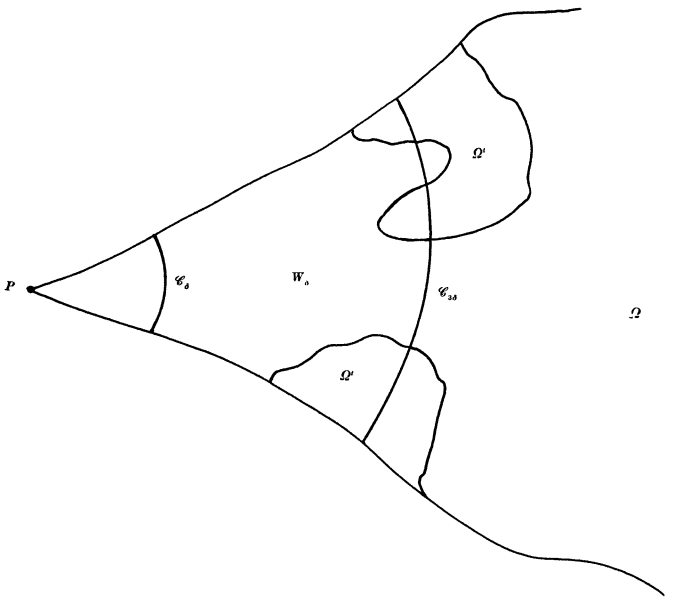

Figure 7.

e.g., [1], Theorem 6, or [14], Chapter 5) there holds $u_\gamma < w_\varepsilon$ in W_δ. In particular, $u_\gamma < t_\varepsilon + 2H_\gamma^{-1}$ in W_δ, and we conclude that if $t \geqslant t_\varepsilon + 2H_\gamma^{-1}$, then $\Omega^t \cap D_\delta = \emptyset$ and thus $\Phi^\varepsilon > 0$ for every such set, by Lemma 2.

Writing $\beta = \cos\gamma$, $\Sigma^t = \Sigma \cap \partial\Omega^t$, we have, by the above remark,

$$\begin{aligned} H_\gamma \int_\Omega u_\gamma\, dx - \beta \oint_\Sigma u_\gamma\, d\sigma &= H_\gamma \int_0^\infty \Omega^t\, dt - \beta \int_0^\infty \Sigma^t\, dt \\ &> -(1-\varepsilon)\int_0^{t_\varepsilon} \Gamma^t\, dt + \int_{t_\varepsilon}^{t_\varepsilon + 2H_\gamma^{-1}} (H_\gamma \Omega^t - \beta \Sigma^t)\, dt - (1-\varepsilon)\int_{t_\varepsilon + 2H_\gamma^{-1}}^\infty \Gamma^t\, dt \\ &> -(1-\varepsilon)\int_0^\infty \Gamma^t\, dt - 2\beta \Sigma H_\gamma^{-1}. \end{aligned}$$

We have on the other hand, by the co-area formula

$$\int_0^\infty \Gamma^t\, dt = \int_\Omega |Du_\gamma|\, dx$$

thus

$$H_\gamma \int_\Omega u_\gamma \, dx - \beta \oint_\Sigma u_\gamma \, d\sigma > -(1-\varepsilon) \int_\Omega |Du_\gamma| \, dx - 2\beta \Sigma H_\gamma^{-1}. \tag{9}$$

We now observe that u_γ minimizes $\mathscr{E}[u; \gamma]$ in $BV(\Omega)$. Thus, comparing with the function $u \equiv 0$, we obtain from (9)

$$\Omega \geqslant \mathscr{E}[u_\gamma] > \int_\Omega \sqrt{1 + |Du_\gamma|^2} \, dx - (1-\varepsilon) \int_\Omega |Du_\gamma| \, dx - 2\beta \Sigma H_\gamma^{-1}$$

and hence

$$\varepsilon \int_\Omega \sqrt{1 + |Du_\gamma|^2} < \Omega + 2\beta \Sigma H_\gamma^{-1}. \tag{10}$$

Let us change the normalization by adding a constant to each u_γ, so that $\int_\Omega u_\gamma \, dx = 0$. Then (cf. Lemma 1.1 in [2])

$$\int_\Omega u_\gamma^2 \, dx \leqslant C \left(\int_\Omega \sqrt{1 + |Du_\gamma|^2} \, dx \right)^2. \tag{11}$$

We have proved:

LEMMA 4. *The surfaces $\{u_\gamma\}$ are bounded in area, independent of γ as $\gamma \searrow \gamma_0$. Under the normalization $\int_\Omega u_\gamma \, dx = 0$, the functions $\{u_\gamma\}$ are bounded in $L^2(\Omega)$.*

We now prove:

LEMMA 5. *For any sequence $\gamma \searrow \gamma_0$, the set $\{u_\gamma\}$ provides a minimiznig sequence for $\mathscr{E}[u; \gamma_0]$ in $BV(\Omega)$.*

PROOF. If not, there would exist $\hat{u} \in BV(\Omega)$ with

$$\begin{aligned} \mathscr{E}[\hat{u}; \gamma_0] &< \inf \mathscr{E}[u_\gamma; \gamma_0] \\ &= \inf \left\{ \mathscr{E}[u_\gamma; \gamma] + (H_{\gamma_0} - H_\gamma) \int_\Omega u_\gamma \, dx - (\cos \gamma_0 - \cos \gamma) \oint_\Sigma u_\gamma \, d\sigma \right\}. \end{aligned}$$

The variational condition for u_γ yields

$$\cos \gamma \oint_\Sigma u_\gamma \, d\sigma = H_\gamma \int_\Omega u_\gamma \, dx + \int_\Omega \sqrt{1 + |Du_\gamma|^2} \, dx - \int_\Omega \frac{1}{\sqrt{1 + |Du_\gamma|^2}} \, dx \, ,$$

hence $\left|\oint_\Sigma u_\gamma\, d\sigma\right|$ remains uniformly bounded, as $\gamma \to \gamma_0$. Thus

$$\begin{aligned}\mathscr{E}[\hat{u};\gamma_0] &< \inf \mathscr{E}[u_\gamma;\gamma]\\ &\leqslant \inf \mathscr{E}[\hat{u};\gamma]\end{aligned}$$

since u_γ is minimizing for $\mathscr{E}[u;\gamma]$. Letting $\gamma \searrow \gamma_0$, we obtain a contradiction

5. – Since the sequence $\{u_\gamma\}$ is bounded in $BV(\Omega)$, a subsequence can be extracted that converges in $L^1(\Omega)$ to a function $u^0 \in BV(\Omega)$.

LEMMA 6. *The function $u^0(x)$ minimizes $\mathscr{E}\{u;\gamma_0\}$ in $BV(\Omega)$.*

PROOF (cf. [15, 20, 2]). Since the $\{u_\gamma\}$ are minimizing (Lemma 5), it suffices to show that $\mathscr{E}\{u^0;\gamma_0\} \leqslant \inf \mathscr{E}\{u_\gamma;\gamma_0\}$. To do so, we apply the inequality (1.4) of [15], for any $f(x) \in BV(\Omega)$:

$$\oint_\Sigma |f(x)|\, ds \leqslant \sqrt{1+L^2}\int_{\mathscr{A}_\delta} |Df(x)|\, dx + \Upsilon(\Omega;\delta)\int_{\mathscr{A}_\delta} |f(x)|\, dx \tag{12}$$

with $\mathscr{A}_\delta = \{x \in \Omega\colon d(x,\Sigma) < \delta\}$, $\delta > 0$ arbitrary (1). Here L is a Lipschitz constant for Σ; according to our hypotheses we may choose $\sqrt{1+L^2} < \cos\gamma + \varepsilon$, for any $\varepsilon > 0$.

We have

$$\begin{aligned}\mathscr{E}\{u_0;\gamma_0\} - \mathscr{E}\{u_\gamma;\gamma_0\} \leqslant &\int_\Omega \sqrt{1+|Du^0|^2}\, dx - \int_\Omega \sqrt{1+|Du_\gamma|^2}\, dx\\ &+ H_{\gamma_0}\int_\Omega |u^0 - u_\gamma|\, dx + (\cos\gamma_0)\oint_\Sigma |u^0 - u_\gamma|\, dx\,.\end{aligned} \tag{13}$$

Applying (12) to the last term in (13), then using the lower semicontinuity of the area functional [16] and the convergence of $\{u_\gamma\}$ in L^1, we obtain

$$\begin{aligned}\mathscr{E}\{u^0;\gamma_0\} - \inf \mathscr{E}\{u_\gamma;\gamma_0\} \leqslant C(\Omega)&\int_{\mathscr{A}_\delta} \sqrt{1+|Du^0|^2}\, dx\\ &+ \varepsilon \sup \int_\Sigma \sqrt{1+|Du_\gamma|^2}\, dx\,.\end{aligned} \tag{14}$$

Since δ and ε are arbitrary, the result follows from Lemma 4.

(1) A somewhat weaker estimate appears in [15], but the proof given there yields the stated result.

LEMMA 7. *The function $u^0(x)$ satisfies the equations* (4, 5, 6) *in the* (*weak*) *variational sense. It is the unique minimizing function for $\mathscr{E}[u;\gamma_0]$ in $BV(\Omega)$, and is equal to the strict solution of* (4, 5, 6) *whenever such a solution exists.*

The proof can be obtained as in [15].

6. – We wish to show that u^0 is bounded, uniformly in Ω. We observe first that the $\{u_\gamma\}$ have uniformly bounded oscillation in any compact subdomain K of Ω, see Lemma 4.4 of [2]. In view of the estimate (11), we see that $|u_\gamma|$ is bounded in any such K, independent of γ as $\gamma \searrow \gamma_0$. We may thus write $|u_\gamma| < M(\delta)$, where δ is distance to Σ.

LEMMA 8. *Let $p \in \Sigma$ be a regular boundary point* (*i.e., not a vertex*). *There exists a ball $B_{\delta'}$ of radius δ' about p, and a function $M'(\delta')$, such that $u_\gamma(x) < M'(\delta')$ in $B_{\delta'} \cap \Omega$. The estimate is independent of γ as $\gamma \searrow \gamma_0$.*

PROOF. Delaunay [16] observed that if an ellipse of major axis $(2H)^{-1}$ is rolled along a line L, the curve described by a focal point (roulade of the ellipse) serves as generating curve $\mathscr{C}$ for a rotation surface S with axis L, which has constant mean curvature H. With increasing eccentricity of the ellipse, $\mathscr{C}$ tends to a circular arc, however, at the part of $\mathscr{C}$ nearest to L an inflection and reversal of curvature continues to occur, as shown in fig. 8*a*.

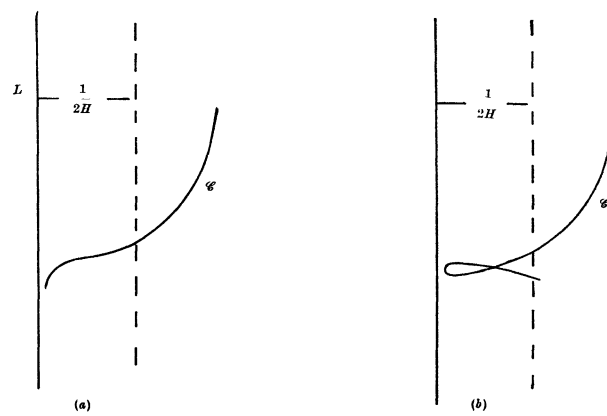

Figure 8. Roulades of (*a*) Ellipse and of (*b*) Hyperbola.

If we choose the plane Π of the figure as coordinate plane, the part of S below the plane can be represented by a function $v(x)$ over the region R bounded by $\mathscr{C}$ and its reflection in L, which satisfies the equation

$$\operatorname{div} Tv = 2H \tag{15}$$

in R and the condition

$$\nu \cdot Tv = 1 \tag{16}$$

on $\mathscr{C}$ and its reflection $\mathscr{C}'$. Given χ, $0 < \chi < 1$, there exist $\varepsilon(\chi) > 0$ and $h(\chi) > 0$ such that for all sufficiently eccentric ellipses, the following holds: there is an interval I of height $2h$ starting from the segment $\overline{ii'}$ joining the inflection point i to its reflection in L (see fig. 8) such that on any curve in I with slope not exceeding $\varepsilon(\chi)$ in magnitude, there holds $\nu \cdot Tv > \chi$. We note that by first choosing h and then increasing the eccentricity, the diameter of I can be made arbitrarily small, for fixed $\varepsilon(\chi)$.

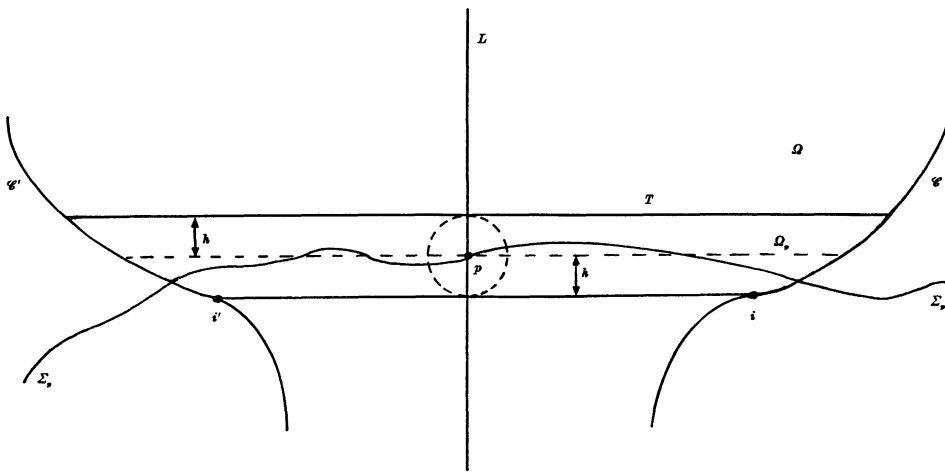

Figure 9. Upper comparison surface from roulade of ellipse.

Each regular point $p \in \Sigma$ is contained in a boundary interval Σ_p satisfying (in some coordinate frame) the above slope condition, with $\chi = \cos\gamma$ and p the midpoint of the segment in I of height h. We position the corresponding surface v as indicated in fig. 9; let $\delta' = \min(h, d(p, \mathscr{C}))$ and denote by T the horizontal at height $2h$, as indicated. We may assume the entire configuration sufficiently small that the figure Ω_p bounded by Σ_p, $\mathscr{C}$, $\mathscr{C}'$, and T lies interior to Ω, and that T has positive distance δ from Σ. If we now choose $2H = H_\gamma$, and add a constant to v so that $v > M(\delta)$ on T, we will have $v > u_\gamma$ on T, $\nu \cdot Tv > \nu \cdot Tu_\gamma$ on the remaining part of $\partial\Omega_p$, and $\operatorname{div} Tv = \operatorname{div} Tu_\gamma$ in Ω_p. To see that h can be chosen to depend only on χ (for sufficiently large eccentricity) we need only observe that in the limit the interval I determines a segment of height h of a sphere, which

in the given orientation has the required property. The general maximum principle (*e.g.*, [1], Theorem 6) now yields $u_\gamma < v$ in Ω_p. Since $B_{\delta'} \cap \Omega \subset \Omega_p$ and since $H_\gamma \nearrow H_{\gamma_0}$ as $\gamma \searrow \gamma_0$, the lemma follows.

LEMMA 9. *Let $p \in \Sigma$ be a regular boundary point. There exists a ball $B_{\delta'}$ of radius δ' about p, and a function $m'(\delta')$ such that $u_\gamma(x) > m'(\delta')$ in $B_{\delta'} \cap \Omega$. The estimate is independent of γ as $\gamma \searrow \gamma_0$.*

PROOF. We proceed as with Lemma 8, however, we replace the roulade of an ellipse by the roulade of a hyperbola (fig. 8*b*). Again for increasing eccentricity the roulade tends to a circular arc except in a small region near L, where its particular properties yield the comparison surface S. In this case it is the part of S that lies *above* Π (rather than below Π as before) for which the representing function $v(x)$ satisfies (15) with $H > 0$, and thus (16) must be replaced by the condition

$$\nu \cdot Tv = -1 \tag{16'}$$

on $\mathscr{C}$, $\mathscr{C}'$. In place of the segment $\overline{ii'}$ we now use a segment $\overline{ss'}$ joining the points closest to L. Given $\chi > 0$, we construct an interval I_h containing $\overline{ss'}$ such that on all curves in I_h of sufficiently small slope, there holds $\nu \cdot Tv < \chi$. For a fixed configuration, that is easily done, since $\nu \cdot Tv = 0$ on $\overline{ss'}$; thus we may choose for I a strip of height $2h$, symmetrically disposed about ss' (fig. 10). In this case, h cannot be chosen a priori inde-

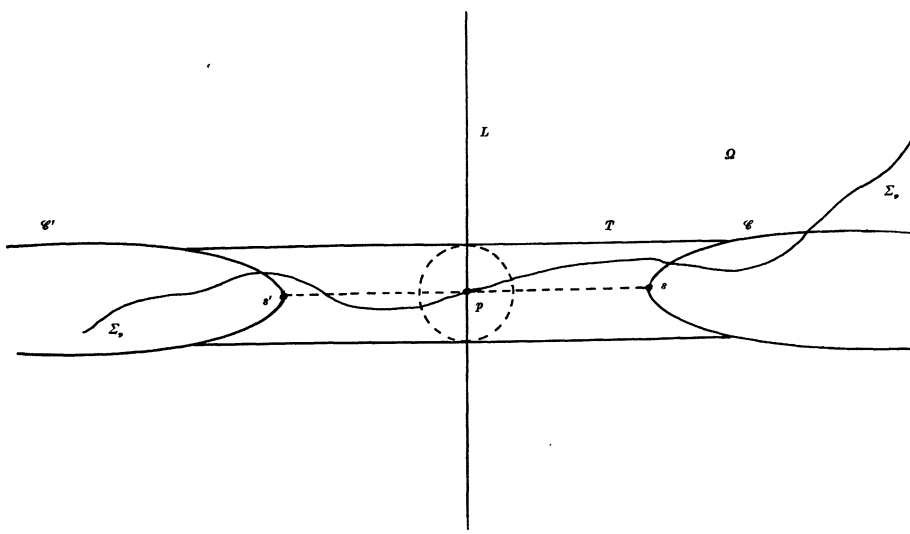

Figure 10. Lower comparison surface from roulade of hyperbola.

pendent of eccentricity; we therefore keep eccentricity constant and instead increase the curvature H of S, a change that can be effected by a uniform contraction of the space variables, centered at p. One sees most easily what happens by observing that the change is equivalent to a uniform dilation of the variables for the solution u_γ while keeping S fixed, followed by a contraction of all variables by the same factor. But the dilation can clearly achieve the required bound on slope within the (fixed) I.

Given a regular point $p \in \Sigma$, we may thus again construct a domain Ω_p as before, bounded by Σ_p, $\mathscr{C}$, $\mathscr{C}'$, T (fig. 10). We now have $\nu \cdot Tv < \nu \cdot Tu_\gamma$ on Σ_p, $\mathscr{C}$, $\mathscr{C}'$. Thus, by adjoining a constant to v so that $v < m(\delta)$ on T, we may again apply the maximum principle of [1] to obtain $u_\gamma > v$ in Ω_p, hence also $u_\gamma > v$ in $B_{\delta'} \cap \Omega$. Again the estimate is uniform in γ as $\gamma \searrow \gamma_0$; the lemma is proved.

It remains to bound u_γ at the singular (vertex) points of Σ.

LEMMA 10. *Suppose Hypothesis $\alpha(\gamma_0)$ holds, and let p, p' be points of Σ, interior to Q_0 and to the uniform neighborhood $\mathcal{N}_p$ of Lemma 3. Let Γ be a simple arc joining p, p' in $Q_0 \cap \Omega$, and let M be the upper bound for u_γ on Γ (Lemma 8 and the preceding remarks). Then in the neighborhood of P in Ω determined by Γ and the arc Σ_p of Σ cut off by Γ and containing P, there holds $u_\gamma < M + 2H_\gamma^{-1}$.*

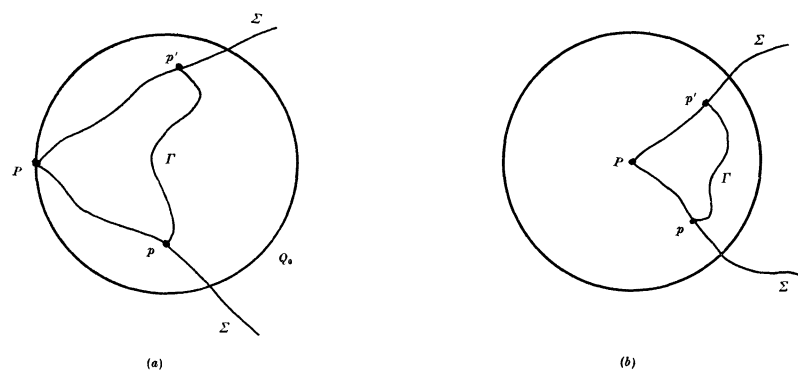

Figure 11. (*a*) Upper and (*b*) lower bounds at a vertex P.

PROOF. The configuration is illustrated in fig. 11*a*. We add a constant to $v(x;\gamma)$ so that $v \geqslant M$ on Γ. Then $v \geqslant u_\gamma$ on Γ by construction, $\nu \cdot Tv \geqslant \nu \cdot Tu_\gamma$ on Σ_P by Lemma 3, and $\operatorname{div} Tv = \operatorname{div} Tu_\gamma$ in the indicated region. The maximum principle of [1] now implies $v > u_\gamma$ in that region. Since v can be chosen so that $v < M + 2H_\gamma^{-1}$, the result follows.

LEMMA 11. *At any vertex P, there is a neighborhood $\mathcal{M}_P$ such that at all points of $\mathcal{M}_P \cap \Sigma$ a lower hemisphere $w(x;\gamma)$ centered at P and of radius H_γ^{-1} satisfies $\nu \cdot Tw \leqslant \cos\gamma$.*

PROOF. See fig. 11*b*. Since Σ is assumed piecewise smooth, its normal ν has a continuous limit from both sides of P; further, the limiting tangents to Σ, for $p \to P$, are radial lines emanating from P, and thus are orthogonal trajectories of level curves of w. Thus, $\lim_{p\to P} \nu \cdot Tw(p) = 0$.

LEMMA 12. *Let P be a vertex, let p, $p' \in \Sigma \cap \mathcal{M}_P$ be on opposite sides of P, and let Γ be a simple arc joining p to p' in Ω and lying interior to a disk of radius H_γ^{-1} about P. Let m be the lower bound of u_γ on Γ (Lemma 9). Then in the neighborhood of P in Ω determined by Γ and by the arc Σ_P of Σ cut off by Γ and containing P, there holds $u_\gamma > m - 2H_\gamma^{-1}$.*

PROOF. We adjoin a constant to w so that $w < m$ on Γ. Then $w < u_\gamma$ on Γ, $\nu \cdot Tw < \nu \cdot Tu_\gamma$ on Σ_P, and div $Tw =$ div Tu_γ in the region cut off by Γ at P. Theorem 6 of [1] again yields the result.

7. – From the above lemmas we see that the function $\{u_\gamma\}$ can be normalized to be bounded above and below in Ω, independent of γ as $\gamma \searrow \gamma_0$. *Thus, the limit function u^0 is also bounded in Ω.* We wish now to show that u^0 is smooth and a strict solution of (4, 5) in Ω.

We observe that since $u_\gamma \to u^0$ in $L^1(\Omega)$, the convergence will be in $L^1(\Gamma)$ on almost every interior circle Γ; we denote the restriction of u^0 to Γ by $\varphi(s)$.

Letting D be the disk bounded by such a Γ, we consider the functional

$$\mathcal{F}[u] \equiv \int_D \sqrt{1 + |Du|^2}\, dx + H_{\gamma_0} \int_D u\, dx + \oint_\Gamma |u - \varphi|\, ds\,. \tag{17}$$

According to a theorem of Miranda [17], if D has sufficiently small radius, there is a minimizing function $v \in BV(D)$ for $\mathcal{F}$, such that $v = \varphi$ a.e. on Γ, and v is real analytic with

$$\operatorname{div} Tv = H_{\gamma_0} \tag{18}$$

in D. For this situation, it is easy to show also the uniqueness of the solution.

LEMMA 13. *The sequence $\{u_\gamma(x)\}$ is minimizing for the functional $\mathcal{F}[u]$.*

PROOF. Let

$$w_\gamma(x) = \begin{cases} v(x) & \text{in } D \cup \Gamma \\ u_\gamma(x) & \text{in } \Omega \setminus \{D \cup \Gamma\}\,. \end{cases}$$

We have

$$(19)\qquad \mathscr{E}[w_\gamma;\gamma_0]-\mathscr{E}[u_\gamma;\gamma_0]=\int_D\sqrt{1+|Dv|^2}\,dx+H_{\gamma_0}\int_D v\,dx+\oint_\Gamma|u_\gamma-\varphi|\,ds$$

$$-\int_D\sqrt{1+|Du_\gamma|^2}\,dx-H_{\gamma_0}\int_D u_\gamma\,dx=\mathscr{F}[v]-\mathscr{F}[u_\gamma]+2\oint_\Gamma|u_\gamma-\varphi|\,ds\,.$$

Since u_γ is a minimizing sequence for $\mathscr{E}[u;\gamma_0]$ and since $u_\gamma\to\varphi$ in $L^1(\Gamma)$, we find

$$\inf\mathscr{F}[u_\gamma]-\mathscr{F}[v]\leqslant\inf\mathscr{E}[u_\gamma;\gamma_0]-\sup\mathscr{E}[w_\gamma;\gamma_0]\leqslant 0$$

as was to be shown.

Since $\mathscr{F}[u]$ is lower semicontinuous (Proposition 2.1 in [2], with $\partial_2\Omega=\emptyset$), we conclude that u^0 minimizes $\mathscr{F}[u]$, hence by the uniqueness theorem, $u^0\equiv v$ in D, and u^0 satisfies (18). Since D is arbitrary (sufficiently small), *we conclude that $u^0(x)$ is real analytic and satisfies* (18) *throughout Ω.*

8. – By using results of Siegel [18], and Gerhardt [10, 19], it can be shown that under some further regularity hypotheses on the smooth part of Σ, the solution u^0 will be differentiable and satisfy (6) strictly at all regular boundary points. Given the indicated results, the procedure does not present great technical difficulty, however, it is tedious in detail and will therefore be omitted.

I wish to thank Claus Gerhardt, Stephan Luckhaus, and Luen-Fai Tam for helpful discussions.

This investigation was supported in part by the National Science Foundation under Grant MCS 83-07826. The work was initiated while the author was visiting at Universität Heidelberg.

REFERENCES

[1] P. Concus - R. Finn, *On capillary free surfaces in the absence of gravity*, Acta Math., **132** (1974), pp. 177-198.

[2] E. Giusti, *Boundary value problems for non-parametric surfaces of prescribed mean curvature*, Ann. Scuola Norm. Sup. Pisa, **3** (1976), pp. 501-548.

[3] E. Giusti, *On the equation of surfaces of prescribed mean curvature. Existence and uniqueness without boundary conditions*, Invent. Math., **46** (1978), pp. 111-137.

[4] R. FINN, *Existence and nonexistence of capillary surfaces*, Manuscripta Math., **28** (1979), pp. 1-11.

[5] R. FINN - E. GIUSTI, *Nonexistence and existence of capillary surfaces*, Manuscripta Math., **28** (1979), pp. 13-20.

[6] JIN-TZU CHEN, *On the existence of capillary free surfaces in the absence of gravity*, Pacific J. Math., **88** (1980), 323-361.

[7] R. FINN, *Existence criteria for capillary free surfaces without gravity*, Indiana J. Math., **32** (1983), 439-460.

[8] R. FINN, *A subsidiary variational problem and existence criteria for capillary surfaces*, J. Reine Angew. Math., to appear.

[9] P. CONCUS - R. FINN, *Continuous and discontinuous disappearance of capillary surfaces*, Lawrence Berkeley Laboratory preprint.

[10] C. GERHARDT, *Global regularity of the solution to the capillarity problem*, Ann. Scuola Norm. Sup. Pisa, **3** (1976), pp. 157-175.

[11] E. GIUSTI, *Minimal surfaces and functions of bounded variation*, Lecture Notes, Department of Mathematics, Australian National University, Camberra.

[12] R. FINN, *Capillarity phenomena*, Uspehi Mat. Nauk, **29**, No. 4 (178), (1974), pp. 131-152; see also Russian Math. Surveys, **29**, No. 4 (1974), pp. 133-153.

[13] R. FINN, *The size and shape of equilibrium capillary surfaces*, Proc. 2nd Internat. Symp. Drops and Bubbles, Monterey, CA, pp. 280-285; Jet Propulsion Lab., Pasadena, CA, 1981.

[14] R. FINN, *Capillary Free Surfaces*, Springer-Verlag (in preparation).

[15] M. EMMER, *Esistenza, unicità e regolarità delle superfici di equilibrio nei capillari*, Ann. Univ. Ferrara Sez. VII (N.S.), **18** (1973), pp. 79-94.

[16] C. E. DELAUNAY: *Sur la surface de révolution dont la courbure moyenne est constante*, J. Math. Pures Appl., **6** (1841), pp. 309-315, see also M. STRURM, *Note a l'occasion de l'article précédent*, ibid, pp. 315-320.

[17] M. MIRANDA, *Dirichlet problems with L^1 data for the non-homogeneous minimal surface equation*, Indiana Univ. Math. J., **24** (1974), pp. 227-241.

[18] D. SIEGEL, *On the behavior of a capillary surface in a narrow tube*, to appear.

[19] C. GERHARDT, *Boundary value problems for surfaces of prescribed mean curvature*, J. Math. Pures Appl., **58** (1979), pp. 75-109.

[20] C. GERHARDT, *Existence and regularity of capillary surfaces*, Boll. Un. Mat. Ital., (4), **10** (1974), pp. 317-335.

Department of Mathematics
Stanford University
Stanford, California