ANNALES DE L'I. H. P., SECTION A

R. F. ALVAREZ-ESTRADA

# Rigorous approach to elastic meson-nucleon scattering in non-relativistic quantum field theory. II : majoration of Feynman diagrams

*Annales de l'I. H. P., section A*, tome 34, nº 3 (1981), p. 277-307
<http://www.numdam.org/item?id=AIHPA_1981__34_3_277_0>

© Gauthier-Villars, 1981, tous droits réservés.

L'accès aux archives de la revue « Annales de l'I. H. P., section A » implique l'accord avec les conditions générales d'utilisation (http://www.numdam.org/conditions). Toute utilisation commerciale ou impression systématique est constitutive d'une infraction pénale. Toute copie ou impression de ce fichier doit contenir la présente mention de copyright.

NUMDAM
*Article numérisé dans le cadre du programme*
*Numérisation de documents anciens mathématiques*
http://www.numdam.org/

*Ann. Inst. Henri Poincaré,*
Vol. XXXIV, n° 3, 1981, p. 277-307.

Section A :
*Physique théorique.*

# Rigorous approach to elastic meson-nucleon scattering in non-relativistic quantum field theory (II): majoration of Feynman diagrams (*)

by

**R. F. ALVAREZ-ESTRADA**
Departamento de Física Teórica, Facultad de Ciencias Físicas,
Universidad Complutense, Madrid-3

RÉSUMÉ. — On étudie rigoureusement la propagation et la diffusion virtuelle de deux bosons par un nucléon habillé pour des énergies totales au-dessous du seuil à deux bosons, dans un modèle des champs quantifiés non-relativistes, du point de vue physique correspondant à l'interaction meson-nucléon à basse énergie. On construit des bornes pour les ensembles infinis de tous les diagrammes de Feynman qui correspondent à ces processus. Ces résultats complètent la construction rigoureuse du ket de Schrödinger à dimension infinie qui décrit la diffusion purement élastique d'un boson par le nucléon habillé, laquelle a été initié dans un travail précédent.

ABSTRACT. — We study rigorously the propagation and virtual scattering of two bosons by a dressed nucleon for total energy below the two-boson threshold, in a non-relativistic field-theoretic model corresponding physically to the low-energy meson-nucleon interaction. We construct and majorize the infinite sets of all Feynman diagrams contributing to those processes. These results complete the rigorous determination of the infinite-dimensional Schrodinger ket describing the purely elastic scattering of a boson by the dressed nucleon, initiated in a previous paper.

(*) A very short summary of this work (announcing its main results without proofs) has been contributed to the « Ninth International Conference on the Few-Body Problem », Eugene, Oregón, USA, 17-23 August 1980 (Session on Mathematical and Computational Methods).


© Gauthier-Villars

# 1. INTRODUCTION

In this paper, we shall continue our rigorous study of elastic scattering in the model for low-energy meson-nucleon interaction formulated in [*1*]. Specifically, our main results here are: 1) the characterization and majoration of the four (Green's) functions $s_i$, $i = 0, 1, 2, 3$, which appear in Eq. (4.C.1) of [*1*] and determine the interaction (propagation and virtual scattering) of two bosons with the dressed nucleon, for total energy strictly below the two-meson threshold, 2) consequently, the proof of the properties *d*1)-*d*7) in subsection 4.C of [*1*]. In section 2, we review the appropriate Feynman rules and characterize the infinite sets of all Feynman diagrams contributing to the functions $s_i$, $i = 0, 1, 2, 3$. In sections 3 and 4, we obtain explicit bounds for the two infinite sets corresponding to $s_0$ and $s_2$ respectively. In sections 5 and 6, we give the bounds for $s_3$, which are more difficult. Section 7 presents, very briefly, the necessary remarks to extend the whole construction when internal degrees of freedom are included. The majoration techniques used here may be useful in other problems.

# 2. THE FUNCTIONS $s_i$, $i = 0, 1, 2, 3$: GENERALITIES

## 2.A. Feynman rules.

We shall summarize below the main rules for representing the perturbative contributions to functions of interest, like the nucleon self-energy M and the functions $s_i$, $i = 0, 1, 2, 3$, through non-relativistic Feynman diagrams. The rules are readily obtained from a standard study of all perturbative contributions to Eqs. (2.B.3-4) (for given E) and Eqs.(4.C.1), (3.3) for $n \geqslant 2$ and (4.A.1-4), (for given $E_+$) in [*1*]. The rules are the following:

1) The nucleon and the mesons are represented by a continuous horizontal line and dashed ones, respectively. The succession of events (« time ») goes from right (past) to left (future). Conservation of total threemomentum (generically denoted by $\bar{\pi}$) will be automatically fulfilled. It is understood that either $\bar{\pi} = 0$ (which is assumed in [*1*] when studying elastic scattering) or $|\bar{\pi}|$ is small ($\bar{\pi}^2/2m_0 < \omega_0$). Any state (initial, final or intermediate) in any diagram will contain, at least, the nucleon line.

2) Let us consider a meson-nucleon vertex where a boson with threemomentum $\bar{k}$ is created, so that there are $n$ mesons at right with threemomenta $\bar{k}_1 \ldots \bar{k}_n$ and, at left, $n + 1$ ones, with threemomenta $\bar{k}, \bar{k}_1 \ldots \bar{k}_n$

(the nucleon having threemomenta $\bar{\pi} - \sum_{i=1}^{n} \bar{k}_i$ and $\bar{\pi} - \bar{k} - \sum_{i=1}^{n} \bar{k}_i$, respectively). Then, the contribution reads

$$[e_{n+1}(z, \bar{\pi}; \bar{k}\bar{k}_1 \ldots \bar{k}_n)]^{-1/2} . f.\ v(k)^* . [\,|\, e_n(z, \bar{\pi}; \bar{k}_1 \ldots \bar{k}_n) \,|\,]^{-1/2}$$

$$\left( e_n(z, \bar{\pi}; \bar{k}_1 \ldots \bar{k}_n) = z - \sum_{i=1}^{n} \omega(k_i) - \frac{\left(\bar{\pi} - \sum_{i=1}^{n} \bar{k}_i\right)^2}{2m_0} \right).$$

3) Let us consider $n + 1$ mesons at right with threemomenta $\bar{k}, \bar{k}_1 \ldots \bar{k}_n$ and a vertex where the boson with threemomentum $\bar{k}$ is absorbed by the nucleon (whose threemomentum changes from $\bar{\pi} - \bar{k} - \sum_{i=1}^{n} \bar{k}_i$ to $\bar{\pi} - \sum_{i=1}^{n} \bar{k}_i$), so that the mesons with threemomenta $\bar{k}_1 \ldots \bar{k}_n$ remain at left. The contribution is

$$[e_n(z, \bar{\pi}; \bar{k}_1 \ldots \bar{k}_n)]^{-1/2} . f. \int d^3\bar{k} . v(k) . [\,|\, e_{n+1}(z, \bar{\pi}; \bar{k}\bar{k}_1 \ldots \bar{k}_n) \,|\,]^{-1/2}$$

The above rules 2) and 3) imply

4) For each *truly* intermediate state (namely, one having one vertex at right and another one at left), which contains $n$ meson with threemomenta $\bar{k}_1 \ldots \bar{k}_n$ and the nucleon, there is a factor $[e_n(z, \bar{\pi}; \bar{k}_1 \ldots \bar{k}_n)]^{-1}$. All threemomenta associated to intermediate mesons, which are, firstly, created and, finally, absorbed, are integrated over.

## 2.B. Diagrammatic characterization of the functions $s_i$, $i = 0, 1, 2, 3$.

A standard study of all perturbative contributions from

$$\left[ \mathbb{1} + \sum_{n=1}^{+\infty} \mathrm{W}^n \right] \mathrm{Y}_2^{(0)}$$

to $d_2^{(2)}(\bar{k}_1\bar{k}_2)$ via Feynman diagrams for given real $z = \mathrm{E}_+ < 2\omega_0$ leads to the following results (recall Eqs. (4.C.1), (4.A.1-4) and (3.3) for $n \geqslant 2$ *in* [*1*]).

$s_0(\bar{k}_1\bar{k}_2)$

It is represented by the sum of all different diagrams having both in

the initial (extreme right) and final (extreme left) states just one nucleon and two spectator mesons with threemomenta $\bar{k}_1, \bar{k}_2$. These two mesons propagate freely, without interacting with the nucleon, from right to left.

$s_1(\bar{k}_1\bar{k}_2; \bar{k}'_1)(s_2(\bar{k}_1\bar{k}_2; \bar{k}'_2))$

It corresponds to the sum of all possible diagrams having both in the initial and final states the nucleon and one spectator meson with threemomentum $\bar{k}_2(\bar{k}_1)$, which never interacts with the nucleon and propagates freely from right to left. Moreover each contributing diagram to $s_1(\bar{k}_1\bar{k}_2; \bar{k}'_1)$ $(s_2(\bar{k}_1\bar{k}_2; \bar{k}'_2))$ has: *i*) an incoming meson with threemomentum $\bar{k}'_1(\bar{k}'_2)$, to be absorbed by the nucleon, and *ii*) an outgoing one, with threemomentum $\bar{k}_1(\bar{k}_2)$, emitted by the nucleon.

$s_3(\bar{k}_1\bar{k}_2; \bar{k}'_1\bar{k}'_2)$

It is associated to the sum of all different diagrams which have: *i*) at extreme right, the nucleon and two bosons with threemomenta $\bar{k}'_1, \bar{k}'_2$ which will be absorbed by the former, *ii*) at extreme left, the nucleon and two mesons with threemomenta $\bar{k}_1, \bar{k}_2$, which have been emitted by the former.

A common feature to all $s_i$, $i = 0, 1, 2, 3$ is that any intermediate, initial or final state appearing in any diagram contributing to any of them contains the nucleon and, at least, two mesons. The total energy $z = E_+$ will always be real and such that any $e_n$ appearing in any contribution to $s_i$, $i = 0, 1, 2, 3$ is strictly negative for any $n(\geqslant 2)$ and any $\bar{k}_1 \ldots \bar{k}_n$ (recall assumption *d*) in section 3 of [*1*]).

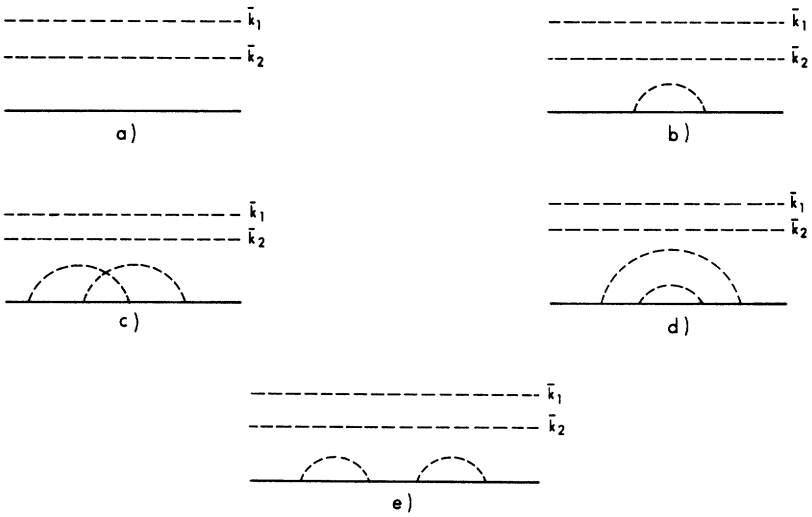


FIG. 1

Figures 1, 2 and 3 present all diagrams contributing to $s_0$, $s_2$ and $s_3$, respectively, up to and including order $f^4$, for given real $z = E_+ < 2\omega_0$. The eight diagrams contributing to $s_1$ to the same orders can be obtained from those in Figure 2 through the replacements $\bar{k}_1 \rightleftarrows \bar{k}_2$, $\bar{k}'_2 \to \bar{k}'_1$. Notice that the analytical contribution associated to diagram *a*) in Figure 1 is simply 1. Notice that all factors $n^{\pm 1/2}$ appearing in the recurrence relations (3.3) in [*1*] and, hence, in W, cancel in the intermediate states and, for this reason, they have been omitted in the formulation of the Feynman rules.

Let us consider a Feynman diagram contributing to some $s_i$, $i = 0, 1, 2, 3$ and let us omit in it all spectator meson lines, namely, those representing bosons which do not interact with the nucleon (two for $i = 0$, one for $i = 1, 2$ and none for $i = 3$). After such omission, the diagram will be called $n$-meson irreducible ($n \geqslant 0$) if it cannot be decomposed into two disconnected subdiagrams by cutting the nucleon line and $n$ meson lines simultaneously (that is, at the same intermediate state) by one vertical line between the first and last vertices of that diagram. A zero-meson irreducible diagram will be named simply irreducible. Extensive use will be made in this paper of irreducible diagrams. For applications of the irreducibility concept in Relativistic Quantum Field Theory, see [*2-4*] and references therein.

## 3. MAJORATIONS OF $s_0$ AND ITS DERIVATIVES

### 3.A. Bound for the irreducible part ($s_{0,1\pi}$).

Let $s_{0,1\pi}(\bar{k}_1\bar{k}_2)$ be the sum of all topologically different diagrams contributing to $s_0(\bar{k}_1\bar{k}_2)$, each of which is simply irreducible provided that the two spectator mesons be omitted first. To all orders in $f$, one has:

$$s_{0,1\pi}(\bar{k}_1\bar{k}_2) = e_2(z, \bar{\pi}; \bar{k}_1\bar{k}_2)^{-1/2} . \mathrm{M}(z \mid \bar{k}_1\bar{k}_2) . \mid e_2(z, \bar{\pi}; \bar{k}_1\bar{k}_2) \mid^{-1/2} \quad (3.\mathrm{A}.1)$$

where $\mathrm{M}(z \mid \bar{k}_1\bar{k}_2)$ is the nucleon self-energy in the presence of two spectator mesons with threemomenta $\bar{k}_1\bar{k}_2$. The expansion of $\mathrm{M}(z \mid \bar{k}_1\bar{k}_2)$ in powers of $f$ for fixed $z$ is

$$\mathrm{M}(z \mid \bar{k}_1\bar{k}_2) = -\sum_{r=0}^{+\infty} \mathrm{M}_r(z \mid \bar{k}_1\bar{k}_2) \quad (3.\mathrm{A}.2)$$

where $-\mathrm{M}_r$ is the sum of all perturbative contributions of order $f^{2r+2}$ to M. Diagrammatically, $e_2^{-1/2} . [-\mathrm{M}_r] . \mid e_2 \mid^{-1/2}$ corresponds to the sum of all different $n = 0$ irreducible graphs having $2r + 2$ vertices and 2 spectator mesons: diagram *b*), (*c*) and *d*)) in Figure 1 is the corresponding contri-

bution for $r = 0$ ($r = 1$). Any perturbative contribution of order $f^{2r+2}$ to $M_r(z \mid \bar{k}_1\bar{k}_2)$ bears the form

$$f^{2r+2} \cdot \int \left[ \prod_{i=1}^{r+1} \frac{d^3\bar{q}_i \mid v(q_i) \mid^2}{(-\varepsilon)} \right],$$

where $\varepsilon$ is according to rules 2), 3) and 4) in subsection 2.A, the product of the corresponding $2r + 1$ $e_n$'s, with $n \geqslant 3$. Since all $e_n$'s are strictly negative, so is $\varepsilon$. Then, the above perturbative contribution to $M_r$ is an integral having a strictly positive integrand, and $M_r$ is the positive sum of all such positive integrals. Generalizing directly the treatment in subsection 2.B of [*1*], one sees that there exists a sequence $b_n(\bar{k}'_1 \ldots \bar{k}'_n \mid \bar{k}_1\bar{k}_2)$, $n \geqslant 1$, such that

$$M(z \mid \bar{k}_1\bar{k}_2) = f. \int d^3\bar{k}'_1 \frac{v(k'_1) b_1(\bar{k}'_1 \mid \bar{k}_1\bar{k}_2)}{\mid e_3(z, \bar{\pi}; \bar{k}'_1\bar{k}_1\bar{k}_2) \mid^{1/2}} \tag{3.A.3}$$

$$b_n(\bar{k}'_1 \ldots \bar{k}'_n \mid \bar{k}_1\bar{k}_2) = \frac{1}{e_{n+2}(z, \bar{\pi}; \bar{k}'_1 \ldots \bar{k}'_n\bar{k}_1\bar{k}_2)^{1/2}} \cdot \left\{ \frac{f}{n^{1/2}} \sum_{i=1}^{n} v(k'_i)^* \right.$$
$$\cdot \frac{b_{n-1}(\bar{k}'_1 \ldots \bar{k}'_{i-1}\bar{k}'_{i+1} \ldots \bar{k}'_n\bar{k}_1\bar{k}_2)}{\mid e_{n+1}(z, \bar{\pi}; \bar{k}'_1 \ldots \bar{k}'_{i-1}\bar{k}'_{i+1} \ldots \bar{k}'_n\bar{k}_1\bar{k}_2) \mid^{1/2}} + f.(n+1)^{1/2}. \int d^3\bar{k}\, v(k).$$
$$\left. \cdot \frac{b_{n+1}(\bar{k}\bar{k}'_1 \ldots \bar{k}'_n\bar{k}_1\bar{k}_2)}{\mid e_{n+3}(z, \bar{\pi}; \bar{k}\bar{k}'_1 \ldots \bar{k}'_n\bar{k}_1\bar{k}_2) \mid^{1/2}} \right\}, \quad n \geqslant 1; \frac{b_0(\bar{k}_1\bar{k}_2)}{\mid e_2(z, \bar{\pi}; \bar{k}_1\bar{k}_2) \mid^{1/2}} = 1 \tag{3.A.4}$$

with $b_{-1} = 0$. Majorations similar to those leading to (2.B.14) in [*1*], yield:

$$\mid M(z \mid \bar{k}_1\bar{k}_2) \mid \leqslant \tau_1(\bar{k}_1\bar{k}_2)^2 . Z_1(\bar{k}_1\bar{k}_2) \tag{3.A.5}$$

$$\tau_1(\bar{k}_1\bar{k}_2) = \left[ f^2 \int d^3\bar{k}'_1 \frac{\mid v(k'_1) \mid^2}{\mid e_3(z, \bar{\pi}; \bar{k}'_1\bar{k}_1\bar{k}_2) \mid} \right]^{1/2} \tag{3.A.6}$$

$$Z_1(\bar{k}_1\bar{k}_2) = \cfrac{1}{1 - \cfrac{\tau_2(\bar{k}_1\bar{k}_2)^2}{1 - \cfrac{\tau_3(\bar{k}_1\bar{k}_2)^2}{1 - \cfrac{\tau_4(\bar{k}_1\bar{k}_2)^2}{1 - \ddots}}}} \tag{3.A.7}$$

$$\tau_n(\bar{k}_1\bar{k}_2) = \left[ \operatorname*{Max}_{\bar{k}'_1 \ldots \bar{k}'_{n-1}} \frac{f^2 . n}{\mid e_{n+1}(z, \bar{\pi}; \bar{k}'_1 \ldots \bar{k}'_{n-1}\bar{k}_1\bar{k}_2) \mid} \int d^3\bar{k} \frac{\mid v(k) \mid^2}{\mid e_{n+2}(z, \bar{\pi}; \bar{k}\bar{k}'_1 \ldots \bar{k}'_{n-1}\bar{k}_1\bar{k}_2) \mid} \right]^{1/2}, \quad n \geqslant 2 \tag{3.A.8}$$

An alternative proof of the bound (3.A.5) proceeds as follows. One has

$$\tau_1(\bar{k}_1\bar{k}_2)^2 . Z_1(\bar{k}_1\bar{k}_2) = \sum_{r=0}^{+\infty} u_r(\bar{k}_1\bar{k}_2) \tag{3.A.9}$$

where $u_r(\bar{k}_1\bar{k}_2)$ is the sum of all positive terms of order $f^{2r+2}$ which arise if $\tau_1(\bar{k}_1\bar{k}_2)^2 . Z_1(\bar{k}_1\bar{k}_2)$ is expanded as a power series in $f^2$, for given $z$. Thus, $u_0 = \tau_1^2$, $u_1 = \tau_1^2 . \tau_2^2$, etc. On the other hand, by considering all diagrams contributing to $M_r(\bar{k}_1\bar{k}_2)$, one finds

$$M_r(\bar{k}_1\bar{k}_2) \leqslant u_r(\bar{k}_1\bar{k}_2) \tag{3.A.10}$$

(recall that $M_r(\bar{k}_1\bar{k}_2) \geqslant 0$). The bound (3.A.10) is trivial for $r = 0$ and easily checked for $r = 1$, and an inductive argument establishes it for $r \geqslant 2$. In conclusion, the bound (3.A.5) can also be derived by majorizing directly all Feynman diagrams contributing to $M_r(\bar{k}_1\bar{k}_2)$ via (3.A.10), and realizing that $\sum_{r=0}^{+\infty} u_r(\bar{k}_1\bar{k}_2)$ is the power series expansion of $\tau_1(\bar{k}_1\bar{k}_2)^2 . Z_1(\bar{k}_1\bar{k}_2)$.

### 3.B. Bound for $|s_0|$ in terms of that for $|s_{0,I\pi}|$.

Any diagram contributing to $s_0(\bar{k}_1\bar{k}_2)$, which is excluded from $s_{0,I\pi}(\bar{k}_1\bar{k}_2)$, can always be decomposed (just by cutting the nucleon and the two spectator meson lines *only* by vertical lines between the first and last vertices) into two or more subdiagrams, each of which does contribute to $s_{0,I\pi}(\bar{k}_1\bar{k}_2)$. An example of this is provided by diagram *e*) in Figure 1. Then, one has (to all orders in $f$):

$$s_0(\bar{k}_1\bar{k}_2) = 1 + \sum_{n=1}^{+\infty} [s_{0,I\pi}(\bar{k}_1\bar{k}_2)]^n = [1 - s_{0,I\pi}(\bar{k}_1\bar{k}_2)]^{-1} \tag{3.B.1}$$

Eqs. (3.B.1), (3.A.1-4) and the bound (3.A.5) imply that for any $\bar{k}_1\bar{k}_2$, $s_0(\bar{k}_1\bar{k}_2)$ is continuous and

$$|s_0(\bar{k}_1\bar{k}_2)| \leqslant [1 - |e_2(z, \bar{\pi}; \bar{k}_1\bar{k}_2)|^{-1} . \tau_1(\bar{k}_1\bar{k}_2)^2 . Z_1(\bar{k}_1\bar{k}_2)]^{-1} \tag{3.B.2}$$

All these establish the result *d*1) in subsection 4.C of [*1*] (at least, for sufficiently small $f$). Notice that $s_{0,I\pi}(\bar{k}_1\bar{k}_2) = s_{0,I\pi}(\bar{k}_2\bar{k}_1)$ and $s_0(\bar{k}_1\bar{k}_2) = s_0(\bar{k}_2\bar{k}_1)$.

### 3.C. Majoration of derivatives of $s_0$.

We shall start with

$$\nabla_{\bar{k}_1} M(z \mid \bar{k}_1\bar{k}_2) = f . \int d^3\bar{k}'_1 v(k'_1) . [\nabla_{\bar{k}_1} b_1(\bar{k}'_1 \mid \bar{k}_1\bar{k}_2)] .$$

Upon applying $\nabla_{\bar{k}_1}$ to the recurrence (3.A.4), one generates a new recur-

rence for $\nabla_{\bar{k}_1} b_n(\bar{k}'_1 \ldots \bar{k}'_n \mid \bar{k}_1\bar{k}_2)$, which also contains terms associated to $b_n$ and $\nabla_{\bar{k}_1}\left[\frac{1}{e_n^{1/2} \cdot \mid e_{n\pm 1} \mid^{1/2}}\right]$. By majorizing the last recurrence in $L^2$-norm, using techniques similar to those leading from (2.B.3) to (2.B.10-11) in [*1*], one obtains

$$\| \nabla_{\bar{k}_1} b_n(\mid \bar{k}_1\bar{k}_2) \|_2 \leqslant \alpha_n^{(2)}(\bar{k}_1\bar{k}_2) + \tau_n(\bar{k}_1\bar{k}_2) . \| \nabla_{\bar{k}_1} b_{n-1}(\mid \bar{k}_1\bar{k}_2) \|_2 + \tau_{n+1}(\bar{k}_1\bar{k}_2) . \| \nabla_{\bar{k}_1} b_{n+1}(\mid \bar{k}_1\bar{k}_2) \|_2 , \qquad n \geqslant 1 \quad (3.C.1)$$

$$\| \nabla_{\bar{k}_1} b_n(\mid \bar{k}_1\bar{k}_2) \|_2 = \left[\int d^3\bar{k}'_1 \ldots d^3\bar{k}'_n \mid \nabla_{\bar{k}_1} b_n(\bar{k}'_1 \ldots \bar{k}'_n \mid \bar{k}_1\bar{k}_2) \mid^2\right]^{1/2}$$

$$\| \nabla_{\bar{k}_1} b_0(\mid \bar{k}_1\bar{k}_2) \|_2 \equiv 0 \qquad (3.C.2)$$

Use is also made of assumption *e*) in subsection 4.B in [*1*]. $\alpha_n^{(2)}(\bar{k}_1\bar{k}_2)$ depends linearly on

$$\| b_n(\mid \bar{k}_1\bar{k}_2) \|_2 \left( = \left[\int d^3\bar{k}'_1 \ldots d^3\bar{k}'_n \mid b_n(\bar{k}'_1 \ldots \bar{k}'_n \mid \bar{k}_1\bar{k}_2) \mid^2\right]^{1/2}\right),$$

which, in turn, is bounded as in subsection 2.B of [*1*]. The recurrence (3.C.1) can be majorized through methods analogous to the ones yielding (2.B.13) and result *a*) in subsection 2.B of [*1*]. This implies that $\mid \nabla_{\bar{k}_1} M(z \mid \bar{k}_1\bar{k}_2) \mid$ is bounded. Generalizing these methods directly, one proves that

$$\left| \frac{\partial^{n_1}}{\partial k_{1,\alpha}^{n_1}} \frac{\partial^{n_2}}{\partial k_{2,\beta}^{n_2}} M(z \mid \bar{k}_1\bar{k}_2) \right|$$

is bounded for any $\bar{k}_1\bar{k}_2$ and $0 < n_1 + n_2 < +\infty$ ($\alpha, \beta = 1, 2, 3$) and the same is true for $\left| \frac{\partial^{n_1}}{\partial k_{1,\alpha}^{n_1}} \frac{\partial^{n_2}}{\partial k_{2,\beta}^{n_2}} s_0(\bar{k}_1\bar{k}_2) \right|$ by virtue of Eq. (3.B.1). These establish the result *d*5) in subsection 4.C of [*1*].

## 4. MAJORATIONS OF $s_2$ AND ITS DERIVATIVES

### 4.A. A useful interlude: remarks on a static model.

Let us consider the static or recoiless version of the model formulated in subsection 2.A of [*1*]: it is defined through Eqs. (2.A.1-2), with $\frac{\bar{p}^2}{2m_0}$ and $\exp \pm i\bar{k}\bar{x}$ replaced by 0 and 1, respectively. Then, $\bar{p}$, $\bar{P}_{tot}$ and $\mathscr{H}_{\bar{\pi}}$ loose their meaning. The statements, equations and results presented in subsections 2.A and 2.B of [*1*] and the Feynman rules, outlined in section 2 above, remain valid provided that the nucleon kinetic energy

$$\left(\frac{1}{2m_0}\left(\bar{\pi} - \sum_{i=1}^{n} \bar{k}_i\right)^2\right)$$

be sustituted by 0. Then, $e_n(z, \bar{\pi}; \bar{k}_1 \ldots \bar{k}_n)$ is replaced by

$$e_n(z; \bar{k}_1 \ldots \bar{k}_n)_{\mathrm{st}} = z - \sum_{i=1}^{n} \omega(k_i) .$$

In particular, and under such replacements, the second Eq. (2.B.4) and (2.B.14) of [*1*] give and majorize the self-energy of the static nucleon, $\mathrm{M}(z)_{\mathrm{st}}$. Similarly, we shall need, later, the self-energy of the static nucleon in the presence of $s$ spectators with threemomenta $\bar{k}_1 \ldots \bar{k}_s$: $\mathrm{M}(z \mid \bar{k}_1 \ldots \bar{k}_s)_{\mathrm{st}}$. The expansion (3.A.2) and all statements and equations presented below it (in particular (3.A.5), (3.A.9-10)) in subsection 3.A of this paper also hold for $\mathrm{M}(z \mid \bar{k}_1 \ldots \bar{k}_s)_{\mathrm{st}}$ provided that one uses the corresponding spectator mesons and replaces $e_{n+2}(z, \bar{\pi}; \bar{k}'_1 \ldots \bar{k}'_n \bar{k}_1 \bar{k}_2)$ by $e_{n+s}(z; \bar{k}'_1 \ldots \bar{k}'_n \bar{k}_1 \ldots \bar{k}_s)_{\mathrm{st}}$.

### 4.B. **Decomposition of the irreducible part,** $s_{2,1\pi}$.

Let $s_{2,1\pi}(\bar{k}_1 \bar{k}_2; \bar{k}'_2)$ be the sum of all different Feynman diagrams contributing to $s_2(\bar{k}_1 \bar{k}_2; \bar{k}'_2)$, each of which is one-meson irreducible, provided that the spectator meson line with threemomentum $\bar{k}_1$ be omitted first. One has

$$s_{2,1\pi}(\bar{k}_1 \bar{k}_2; \bar{k}'_2) = \sum_{i=1}^{3} s^{(i)}_{2,1\pi}(\bar{k}_1 \bar{k}_2; \bar{k}'_2) \tag{4.B.1}$$

where

*a*) $s^{(1)}_{2,1\pi}(\bar{k}_1 \bar{k}_2; \bar{k}'_2)$ is the sum of all diagrams contributing to $s_{2,1\pi}(\bar{k}_1 \bar{k}_2; \bar{k}'_2)$ such that the incoming and outgoing meson lines with threemomenta $\bar{k}'_2$ and $\bar{k}_2$, respectively, do *not* cross, that is, the incoming meson is absorbed by the nucleon *before* the outgoing one be omitted. Diagram *a*) in Figure 4 displays one contribution to $s^{(1)}_{2,1\pi}(\bar{k}_1 \bar{k}_2; \bar{k}'_2)$.

*b*) $s^{(2)}_{2,1\pi}(\bar{k}_1 \bar{k}_2; \bar{k}'_2)$ is the sum of all diagrams contributing to $s_{2,1\pi}$ and excluded from $s^{(1)}_{2,1\pi}$, each of which has the following property. Any vertical line cutting the nucleon line between the first and last vertices of such diagram necessarily cuts the spectator meson line, one or both of the incoming and outgoing meson lines and, at least, one internal (first emitted and, later, absorbed) meson line. Diagram *c*) in Figure 2 contributes to $s^{(2)}_{2,1\pi}(\bar{k}_1 \bar{k}_2; \bar{k}'_2)$.

*c*) $s^{(3)}_{2,1\pi}(\bar{k}_1 \bar{k}_2; \bar{k}'_2)$ is the sum of all remaining diagrams which contribute to $s_{2,1\pi}$ and are excluded from $\sum_{i=1}^{2} s^{(i)}_{2,1\pi}$. In each diagram belonging to $s^{(3)}_{2,1\pi}$, there is, at least, one vertical line cutting the nucleon line between the first and last vertices which cuts only the spectator meson lines, but no internal meson line. Diagrams *a*), *b*), *d*) and *e*) in Figure 2 contribute to $s^{(3)}_{2,1\pi}$.

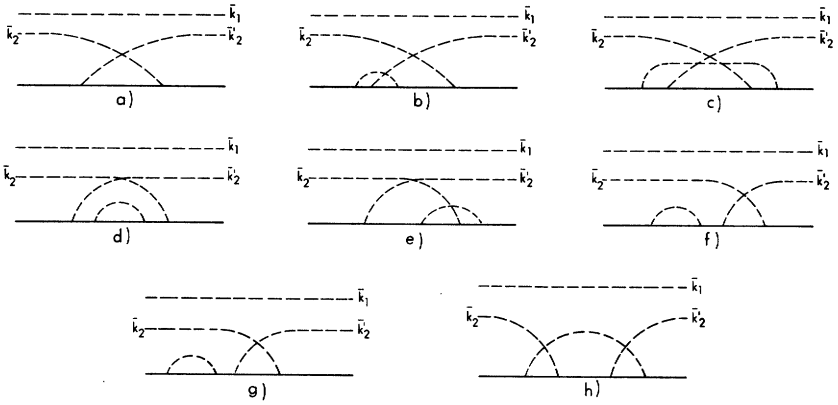


FIG. 2

## 4.C. A bound for $|s^{(1)}_{2,1\pi}|$.

A bound for $|s^{(1)}_{2,1\pi}(\bar{k}_1\bar{k}_2;\bar{k}'_2)|$ can be obtained through the following steps:

1) Let the following two diagrammatic operations be performed:

1 *a*) If, in any diagram with $2r+4$ vertices contributing to $s^{(1)}_{2,1\pi}$ ($r=0$ being excluded, by irreducibility), one deletes the incoming ($\bar{k}'_2$) and outgoing ($\bar{k}_2$) meson lines, one gets a diagram of order $f^{2r+2}$ contributing to $M(z\,|\,\bar{k}_1)_{st}$. This is exemplified for $r=1$ through diagrams *a*) and *b*) in Figure 4. The reason for the subscript « st » will be explained below.

1 *b*) In a given (simply irreducible) self-energy diagram of order $f^{2r+2}$, $r \geqslant 1$, contributing to $M_r(z\,|\,\bar{k}_1)_{st}$, let us add, between the first and last vertices, two non-crossing meson lines with threemomenta $\bar{k}_2$ and $\bar{k}'_2$ : the incoming one ($\bar{k}'_2$) is absorbed by the nucleon before the latter emits the outgoing one ($\bar{k}_2$). The application of this operation in all possible ways clearly generates a set of $\binom{2r+2}{2} = (r+1).(2r+1)$ new diagrams of order $f^{2r+4}$. A key remark is that only part of the new diagrams contribute to $s^{(1)}_{2,1\pi}$ at order $f^{2r+4}$, due to irreducibility.

2) As an example, we notice that the $f^6$-contribution of diagram *a*) in Figure 4 to $s^{(1)}_{2,1\pi}$ is clearly bounded in absolute value by

$$\Lambda_1(\bar{k}_1\bar{k}_2;\bar{k}'_2) \cdot \left\{ f^4 \int \frac{d^3\bar{q}_1 d^3\bar{q}_2\,|\,v(q_1)\,|^2 .\,|\,v(q_2)\,|^2}{|\,e_2(z;\bar{q}_1\bar{k}_1)_{st}\,|\,.\,|\,e_3(z;\bar{q}_1\bar{q}_2\bar{k}_1)_{st}\,|\,.\,|\,e_2(z;\bar{q}_2\bar{k}_1)_{st}\,|} \right\} \tag{4.C.1}$$

$$\Lambda_1(\bar{k}_1\bar{k}_2;\bar{k}'_2) = \frac{f^2 .\,|\,v(k_2)\,|\,.\,|\,v(k'_2)\,|}{|\,e_2(z,\bar{\pi};\bar{k}_1\bar{k}_2)\,|^{1/2}.\,|\,e_2(z,\bar{\pi};\bar{k}_1\bar{k}'_2)\,|^{1/2} .(\omega_0+\omega_{k_1}+\omega_{k_2}-z).(\omega_0+\omega_{k_1}+\omega_{k'_2}-z)} \tag{4.C.2}$$

$\Lambda_1(\bar{k}_1\bar{k}_2;\bar{k}'_2)$ is finite as $z = E_+ < 2\omega_0$, and the integral multiplying it in (4.C.1) is the $f^4$-contribution to $M_1(z\,|\,\bar{k}_1)_{st}$ (the self-energy of the static nucleon to order $f^4$ with one spectator meson) displayed in diagram *b*) of Figure 4. Notice that in order to isolate a self-energy contribution properly, we have been forced to neglect the nucleon kinetic energies in all $e_n$'s inside the integral over $\bar{q}_1$ and $\bar{q}_2$. This type of majoration, which will lead to the self-energy $M_{st}$ of a static nucleon, will be made for all diagrams contributing to $s^{(1)}_{2,1\pi}$ and also in what follows, as the subindices « st » at the final results will indicate. Let us combine the operations 1 *a*) and 1 *b*) in step 1) above together with the fact that $M_r(z\,|\,\bar{k}_1)_{st}$ is a positive sum of integrals, each of which has a positive integrand, as $z = E_+$ is real and strictly less than $2\omega_0$ (in simple terms, the property reads

$$\sum_i |\,f_i\,| = \left|\sum_i f_i\right| = M_{r,st} \geqslant 0\,, \qquad f_i \geqslant 0\,:$$

remember the above statements between Eqs. (3.A.2) and (3.A.3)). It follows that the sum of all contributions of order $f^{2r+4}$, $r \geqslant 1$, to $s^{(1)}_{2,1\pi}$ is bounded in absolute value by $\Lambda_1(\bar{k}_1\bar{k}_2;\bar{k}'_2).(r+1).(2r+1).M_r(z\,|\,\bar{k}_1)_{st}$.

3) Consequently, by using the counterpart of (3.A.10) for $M_r(z\,|\,\bar{k}_1)_{st}$ and $u_r(z\,|\,\bar{k}_1)_{st}$, noticing that the latter is of order $f^{2r+2}$, replacing the factors $(r+1).(2r+1)$ by suitable differentiations with respect to $f^2$ and using the analogue of (3.A.9) for $u_r(z\,|\,\bar{k}_1)_{st}$, one gets the desired bound to all orders in $f$:

$$\begin{aligned} |\,s^{(1)}_{2,1\pi}(\bar{k}_1\bar{k}_2;\bar{k}'_2)\,| &\leqslant \Lambda_1(\bar{k}_1\bar{k}_2;\bar{k}'_2).\sum_{r=1}^{+\infty}(r+1).(2r+1).u_r(z\,|\,\bar{k}_1)_{st} \\ &= \Lambda_1(\bar{k}_1\bar{k}_2;\bar{k}'_2).\left\{2.f^4\frac{\partial^2}{\partial(f^2)^2} + f^2\frac{\partial}{\partial(f^2)}\right\}.\left\{\tau_1(\bar{k}_1)^2_{st}[Z_1(\bar{k}_1)_{st} - 1]\right\} \end{aligned} \tag{4.C.3}$$

$Z_1(\bar{k}_1)_{st}$ is given by the right-hand-side of Eq. (3.A.7), with

$$\tau_n(\bar{k}_1\bar{k}_2) \to \tau_n(\bar{k}_1)_{st}\,, \qquad n \geqslant 2\,.$$

In turn, all $\tau_n(\bar{k}_1)_{st}$, $n \geqslant 1$, are given by the corresponding right-hand-sides of Eqs. (3.A.6) and (3.A.8), with $e_{s+2}(z,\bar{\pi};\bar{k}'_1\ldots\bar{k}'_s\bar{k}_1\bar{k}_2)$ replaced by $e_{s+1}(z;\bar{k}'_1\ldots\bar{k}'_s\bar{k}_1)_{st}$, $s \geqslant 1$.

### 4.D. A bound for $|\,s^{(2)}_{2,1\pi}\,|$.

A bound for $|\,s^{(2)}_{2,1\pi}(\bar{k}_1\bar{k}_2;\bar{k}'_2)\,|$ is obtained by a direct generalization of the arguments used for $|\,s^{(1)}_{2,1\pi}\,|$. Since the incoming and outgoing meson lines with threemomenta $\bar{k}'_2, \bar{k}_2$ now cross each other, one has to include

$r = 0$ contributions (namely, diagram $c$) in Figure 2). The result is (to all orders in $f$):

$$|s^{(2)}_{2,\mathrm{I}\pi}(\bar{k}_1\bar{k}_2;\bar{k}'_2)| \leqslant \Lambda_1(\bar{k}_1\bar{k}_2;\bar{k}'_2).\left\{2f^4\frac{\partial^2}{\partial(f^2)^2}+f^2\frac{\partial}{\partial(f^2)}\right\}\{\tau_1(\bar{k}_1)^2_{\mathrm{st}}.\mathrm{Z}_1(\bar{k}_1)_{\mathrm{st}}\} \quad (4.\mathrm{D}.1)$$

### 4.E. A bound for $|s^{(3)}_{2,\mathrm{I}\pi}|$.

Upon generalizing properly the techniques used for $|s^{(1)}_{2,\mathrm{I}\pi}|$, we shall majorize $|s^{(3)}_{2,\mathrm{I}\pi}|$. The structure of any diagram contributing to $s^{(3)}_{2,\mathrm{I}\pi}(\bar{k}_1\bar{k}_2;\bar{k}'_2)$ generalizes those of diagrams *a*), *b*), *d*) and *e*) in Figure 2. Such a generic diagram contains *i*) $n \geqslant 0$ subdiagrams each of which contributes to the self-energy $\mathrm{M}(z\,|\,\bar{k}_1\bar{k}_2\bar{k}'_2)$ with three spectator mesons having threemomenta $\bar{k}_1, \bar{k}_2, \bar{k}'_2$, and, *ii*) two vertex parts associated to the emission of $\bar{k}_2$ (with spectators $\bar{k}_1, \bar{k}'_2$) and the absorption of $\bar{k}'_2$ (with spectators $\bar{k}_1, \bar{k}_2$). The equations and results for $\mathrm{M}(z\,|\,\bar{k}_1\bar{k}_2)$ given in subsection 3.A can be extended to $\mathrm{M}(z\,|\,\bar{k}_1\bar{k}_2\bar{k}'_2)$ with the corresponding new $\tau$'s and $\mathrm{Z}_1$, provided that $e_{s+2}(z,\bar{\pi};\bar{k}'_1\ldots\bar{k}'_s\bar{k}_1\bar{k}_2)$ be replaced by $e_{s+3}(z,\bar{\pi};\bar{k}'_1\ldots\bar{k}'_s\bar{k}_1\bar{k}_2\bar{k}'_2)$. On the other hand, let us delete the meson line with threemomentum $\bar{k}'_2$ in, say, a vertex part corresponding to the absorption of $\bar{k}'_2$ with spectators $\bar{k}_1, \bar{k}_2$. Then, one obtains a contribution to $\mathrm{M}(z\,|\,\bar{k}_1\bar{k}_2)_{\mathrm{st}}$. Conversely, a diagram with $2r+2$ vertices, $r \geqslant 0$, contributing to $\mathrm{M}(z\,|\,\bar{k}_1\bar{k}_2)_{\mathrm{st}}$ gives rise to $2r+1$ different vertex diagrams where the boson with threemomentum $\bar{k}'_2$ is absorbed in pressence of the spectators $\bar{k}_1, \bar{k}_2$. Generalizing the majorations leading to (4.C.3) and (4.D.1), one gets (to all orders in $f$):

$$|s^{(3)}_{2,\mathrm{I}\pi}(\bar{k}_1\bar{k}_2;\bar{k}'_2)| \leqslant \frac{f^2.|v(k_2)|.|v(k'_2)|}{|e_2(z,\bar{\pi};\bar{k}_1\bar{k}_2)|^{1/2}.|e_2(z,\bar{\pi};\bar{k}_1\bar{k}'_2)|}.\frac{1}{|e_3(z,\bar{\pi};\bar{k}_1\bar{k}_2\bar{k}'_2)|} .\Lambda_2(\bar{k}_1\bar{k}_2;\bar{k}'_2).g_1(\bar{k}_1\bar{k}_2)_{\mathrm{st}}.g_1(\bar{k}_1\bar{k}'_2)_{\mathrm{st}} \quad (4.\mathrm{E}.1)$$

$$\Lambda_2(\bar{k}_1\bar{k}_2;\bar{k}'_2) = [1-|e_3(z,\bar{\pi};\bar{k}_1\bar{k}_2\bar{k}'_2)|^{-1}.\tau_1(\bar{k}_1\bar{k}_2\bar{k}'_2)^2.\mathrm{Z}_1(\bar{k}_1\bar{k}_2\bar{k}'_2)]^{-1} \quad (4.\mathrm{E}.2)$$

$$g_1(\bar{k}_1\bar{k}_2)_{\mathrm{st}} = 1+\frac{1}{\omega_{k_1}+\omega_{k_2}-z}.\left\{2f^2.\frac{\partial}{\partial(f^2)}-1\right\} .\{\tau_1(\bar{k}_1\bar{k}_2)^2_{\mathrm{st}}.\mathrm{Z}_1(\bar{k}_1\bar{k}_2)_{\mathrm{st}}\} \quad (4.\mathrm{E}.3)$$

### 4.F. Bound for $|s_2|$ in terms of that for $|s_{2,\mathrm{I}\pi}|$.

Eq. (4.B.1) implies $|s_{2,\mathrm{I}\pi}| \leqslant \sum_{i=1}^{3}|s^{(i)}_{2,\mathrm{I}\pi}|$ and through (4.C.3), (4.D.1) and (4.E.1), an absolute bound for $|s_{2,\mathrm{I}\pi}|$. Any diagram contributing

to $s_2(\bar{k}_1\bar{k}_2;\bar{k}'_2)$ (and excluded from $s_{2,\mathrm{I}\pi}(\bar{k}_1\bar{k}_2;\bar{k}'_2)$ by irreducibility) can be decomposed, by means of vertical lines which only cut the spectator meson, the nucleon and *one* internal meson lines, into subdiagrams which are either self-energy graphs (contributing to $\mathrm{M}(z\,|\,\bar{k}_1\bar{k}_2)$ or $\mathrm{M}(z\,|\,\bar{k}_1\bar{k}'_2)$) or contributions to $s_{2,\mathrm{I}\pi}(\bar{k}_1\bar{k}_2;\bar{k}'_2)$. These facts lead (through arguments which generalize the derivation of (3.B.1)) to the following general equations which give $s_2(\bar{k}_1\bar{k}_2;\bar{k}'_2)$ in terms of $s_{2,\mathrm{I}\pi}(\bar{k}_1\bar{k}_2;\bar{k}'_2)$ to all orders in $f$ (for given $z = \mathrm{E}_+$)

$$s_2(\bar{k}_1\bar{k}_2;\bar{k}'_2) = s_0(\bar{k}_1\bar{k}_2).\tilde{s}_2(\bar{k}_1\bar{k}_2;\bar{k}'_2).s_0(\bar{k}_1\bar{k}'_2) \tag{4.F.1}$$

$$\tilde{s}_2(\bar{k}_1\bar{k}_2;\bar{k}'_2) = s_{2,\mathrm{I}\pi}(\bar{k}_1\bar{k}_2;\bar{k}'_2) + \int d^3\bar{q}\,.\,s_{2,\mathrm{I}\pi}(\bar{k}_1\bar{k}_2;\bar{q})s_0(\bar{k}_1\bar{q}).\tilde{s}_2(\bar{k}_1\bar{q};\bar{k}'_2) \tag{4.F.2}$$

Notice that diagrams *h*), *f*) and *g*) in Figure 2 are typical contributions to $s_2(\bar{k}_1\bar{k}_2;\bar{k}'_2)$ which: *i*) are excluded from $s_{2,\mathrm{I}\pi}(\bar{k}_1\bar{k}_2;\bar{k}'_2)$, *ii*) come from Eqs. (4.F.1-2), provided that $s_{2,\mathrm{I}\pi}$ be approximated by diagram *a*) in Figure 2. Thus, diagram *h*) results from Eq. (4.F.1) and the first iterate of Eq. (4.F.2), $s_0$ being replaced by unity. Diagrams *f*) and *g*) come from Eq. (4.F.1), $s_0$ and $\tilde{s}_2$ being respectively replaced by its $f^2$-approximation and diagram *a*) in Figure 2.

Upon iterating Eq. (4.F.2), majorizing the series of iterations by means of Schwartz inequality, summing the resulting geometric series, and majorizing directly in Eq. (4.F.1), one finds:

$$\begin{aligned}|\,s_2(\bar{k}_1\bar{k}_2;\bar{k}'_2)\,| \leqslant |\,s_0(\bar{k}_1\bar{k}_2)\,|\,.\,|\,s_0(\bar{k}_1\bar{k}'_2)\,|\,.\Bigg\{&|\,s_{2,\mathrm{I}\pi}(\bar{k}_1\bar{k}_2;\bar{k}'_2)\,| \\ &+\Bigg[\left(\int d^3\bar{q}\,|\,s_{2,\mathrm{I}\pi}(\bar{k}_1\bar{k}_2;\bar{q})\,|^2.\,|\,s_0(\bar{k}_1\bar{q})\,|^2\right) \\ &.\left(\int d^3\bar{q}'\,|\,s_{2,\mathrm{I}\pi}(\bar{k}_1\bar{q}';\bar{k}'_2)\,|^2.\,|\,s_0(\bar{k}_1\bar{q}')\,|^2\right)\Bigg]^{1/2} \\ &.\left[1-\int d^3\bar{q}''d^3\bar{q}'''\,|\,s_{2,\mathrm{I}\pi}(\bar{k}_1\bar{q}'';\bar{q}''')\,|^2.\,|\,s_0(\bar{k}_1\bar{q}''')\,|^2\right]^{-1}\Bigg\}\end{aligned} \tag{4.F.3}$$

The bound (4.F.3) is finite for suitably small $f$ (recall assumption *b*) in [*1*]). By recalling the comments made at the beginning of this subsection, one sees that (4.F.3) establishes the result *d*2) in subsection 4.C of [*1*] for $s_2$.

The above rigorous study of $s_2$ also provides a basis for approximate treatments. In fact, to any desired accuracy, one may approximate $s_{0,\mathrm{I}\pi}$ and $s_{2,\mathrm{I}\pi}$ by a finite number of Feynman diagrams. Then, one may obtain $s_0$ from Eq. (3.B.1) and, later, $s_2$ via Eqs. (4.F.1-2), by solving (4.F.2), by either successive iterations or approximating it by another integral equation with a separable kernel.

Through suitable changes of indices, the preceding study of $s_2$ inmediately applies for $s_1$.

## 4.G. Majoration of derivatives of $s_2$.

We shall outline the proof of the result $d6$) in subsection 4.C of [1]. First, we shall majorize, for $i = 1, 2$

$$\begin{aligned}\nabla_{\bar{k}_i} s^{(1)}_{2,1\pi}(\bar{k}_1\bar{k}_2;\bar{k}'_2) &= [\nabla_{\bar{k}_i} e_2(z,\bar{\pi};\bar{k}_1\bar{k}_2)^{-1/2}].e_2(z,\bar{\pi};\bar{k}_1\bar{k}_2)^{1/2}.s^{(1)}_{2,1\pi}(\bar{k}_1\bar{k}_2;\bar{k}'_2)\\ &+ s^{(1)}_{2,1\pi}(\bar{k}_1\bar{k}_2;\bar{k}'_2).\,|\,e_2(z,\bar{\pi};\bar{k}_1\bar{k}'_2)\,|^{1/2}\\ &.\,[\nabla_{\bar{k}_i}|\,e_2(z,\bar{\pi};\bar{k}_1\bar{k}'_2)\,|^{-1/2}] + e_2(z,\bar{\pi};\bar{k}_1\bar{k}_2)^{-1/2}\\ &.\,\{\nabla_{\bar{k}_i}[e_2(z,\bar{\pi};\bar{k}_1\bar{k}_2)^{1/2}.s^{(1)}_{2,1\pi}(\bar{k}_1\bar{k}_2;\bar{k}'_2).\,|\,e_2(z,\bar{\pi};\bar{k}_1\bar{k}'_2)\,|^{1/2}]\}\\ &.\,|\,e_2(z,\bar{\pi};\bar{k}_1\bar{k}'_2)\,|^{-1/2} \qquad (4.G.1)\end{aligned}$$

Notice that $|\nabla_{\bar{k}_i} e_2(z,\bar{\pi};\bar{k}_1\bar{k}_2)^{-1/2}| \leqslant \sigma'.\,|\,e_2(z,\bar{\pi};\bar{k}_1\bar{k}_2)\,|^{-1/2}$, $\sigma'$ being a finite constant, and so on for $|\nabla_{\bar{k}_i}|\,e_2\,|^{-1/2}|$ (recall assumption $e$) in subsection 4.B of [1]). Then, since a bound for $|\,s^{(1)}_{2,1\pi}\,|$ has been given in subsection 4.C, the only remaining problem consists in majorizing

$$\nabla_{\bar{k}_i}[e_2^{1/2}.s_{2,1\pi}.\,|\,e_2\,|^{1/2}].$$

Next, we shall treat the case $i = 1$. Let us consider the analytic contributions associated to all diagrams for $e_2^{1/2}.s^{(1)}_{2,1\pi}.\,|\,e_2\,|^{1/2}$, each of which contains $2r + 4$ vertices, $r \geqslant 1$, and, hence, $2r + 3$ $e_n^{-1}$'s, and let us apply $\nabla_{\bar{k}_i}$ to the total sum of those contributions. This differentiation gives rise to $2r + 3$ new terms (corresponding to the $2r + 3$ possible $\nabla_{\bar{k}_1}(e_n^{-1})$) for each of the above diagrams of order $f^{2r+4}$. Since $|\nabla_{\bar{k}_1} e_n^{-1}| \leqslant \sigma''.\,|\,e_n\,|^{-1}$, $\sigma''$ being a finite constant, the sum of all terms of order $f^{2r+4}$ obtained after the above differentiation is bounded in absolute value (through techniques which generalize those used for $|\,s^{(1)}_{2,1\pi}\,|$) by

$$\Lambda'_1(\bar{k}_1\bar{k}_2;\bar{k}'_2).(2r+3)(r+1)(2r+1).u_r(z\,|\,\bar{k}_1)_{\mathrm{st}} \qquad (4.G.2)$$

$$\Lambda'_1(\bar{k}_1\bar{k}_2;\bar{k}'_2) = \frac{\sigma'''.f^2.\,|\,v(k_2)\,|\,.\,|\,v(k'_2)\,|}{(\omega_{k_1}+\omega_{k_2}+\omega_0-z)(\omega_{k_1}+\omega_{k'_2}+\omega_0-z)} \qquad (4.G.3)$$

$\sigma'''$ being a finite constant. Then, by recalling (4.C.3), one finds to all orders in $f$:

$$\begin{aligned}&|\,\nabla_{\bar{k}_1}[e_2(z,\bar{\pi};\bar{k}_1\bar{k}_2)^{1/2}.s^{(1)}_{2,1\pi}(\bar{k}_1\bar{k}_2;\bar{k}'_2).\,|\,e_2(z,\bar{\pi};\bar{k}_1\bar{k}'_2)\,|^{1/2}]\,|\\ &\qquad\leqslant \Lambda'_1(\bar{k}_1\bar{k}_2;\bar{k}'_2).\sum_{r=1}^{+\infty}(2r+3).(r+1).(2r+1).u_r(z\,|\,\bar{k}_1)_{\mathrm{st}}\\ &\qquad= \Lambda'_1(\bar{k}_1\bar{k}_2;\bar{k}'_2).\left\{2f^4\frac{\partial^2}{\partial(f^2)^2}+f^2\frac{\partial}{\partial(f^2)}\right\}.\left\{2f^2\frac{\partial}{\partial(f^2)}+1\right\}\\ &\qquad.\,[(\tau_1(\bar{k}_1)_{\mathrm{st}})^2(Z_1(\bar{k}_1)_{\mathrm{st}}-1)] \equiv \Lambda''_1(\bar{k}_1\bar{k}_2;\bar{k}'_1\bar{k}'_2) \qquad (4.G.4)\end{aligned}$$

The majoration of $\nabla_{\bar{k}_2}[e_2^{1/2}.s^{(1)}_{2,1\pi}.\,|\,e_2\,|^{1/2}]$ proceeds along similar lines: then, there are additional contributions of the type $\nabla_{\bar{k}_2} v(k_2)^*$ times certain

factors which, in turn, can be bounded by self-energy contributions (and, hence, by $u_r(z \mid \bar{k}_1)_{st}$'s). The final result is

$$\begin{aligned} &\mid \nabla_{\bar{k}_2}[e_2(z, \bar{\pi}; \bar{k}_1\bar{k}_2)^{1/2} . s^{(1)}_{2,1\pi}(\bar{k}_1\bar{k}_2; \bar{k}'_2) . \mid e_2(z, \bar{\pi}; \bar{k}_1\bar{k}_2) \mid^{1/2}] \mid \\ &\quad \leqslant \Lambda''_1(\bar{k}_1\bar{k}_2; \bar{k}'_1\bar{k}'_2) + \mid \nabla_{\bar{k}_2} v(k_2) \mid \\ &\quad . \frac{f^2 . \mid v(k'_2) \mid}{(\omega_{k_1} + \omega_{k_2} + \omega_0 - z) . (\omega_{k_1} + \omega_{k'_2} + \omega_0 - z)} . \left\{ 2f^4 \frac{\partial^2}{\partial (f^2)^2} + f^2 \frac{\partial}{\partial (f^2)} \right\} \\ &\quad . [\tau_1(\bar{k}_1)^2_{st} . (Z_1(\bar{k}_1)_{st} - 1)] \end{aligned} \tag{4.G.5}$$

These accomplish the majoration of $\nabla_{\bar{k}_i} s^{(1)}_{2,1\pi}$ and so on for $\nabla_{\bar{k}_i} s^{(h)}_{2,1\pi}$, $i = 1, 2$, $h = 2, 3$, for $\nabla_{\bar{k}_2} s^{(l)}_{2,1\pi}$, $l = 1, 2, 3$, and for higher-order derivatives of $s^{(l)}_{2,1\pi}$, $l = 1, 2, 3$. Let us outline the majoration of $\nabla_{\bar{k}_1} \tilde{s}_2(\bar{k}_1\bar{k}_2 ; \bar{k}'_2)$. Upon applying $\nabla_{\bar{k}_1}$ to Eq. (4.F.2), one obtains

$$\begin{aligned} &\nabla_{\bar{k}_1} \tilde{s}_2(\bar{k}_1\bar{k}_2 ; \bar{k}'_2) \\ &\quad = \left\{ \nabla_{\bar{k}_1} s_{2,1\pi}(\bar{k}_1\bar{k}_2 ; \bar{k}'_2) + \int d^3\bar{q} [\nabla_{\bar{k}_1}(s_{2,1\pi}(\bar{k}_1\bar{k}_2 ; \bar{q}) s_0(\bar{k}_1\bar{q}))] . \tilde{s}_2(\bar{k}_1\bar{q} ; \bar{k}'_2) \right\} \\ &\quad + \int d^3\bar{q} s_{2,1\pi}(\bar{k}_1\bar{k}_2; \bar{q}) s_0(\bar{k}_1\bar{q}) . [\nabla_{\bar{k}_1} \tilde{s}_2(\bar{k}_1, \bar{q}; \bar{k}'_2)] \end{aligned} \tag{4.G.6}$$

which is regarded as a linear integral equation for $\nabla_{\bar{k}_1} \tilde{s}_2$, the contributions inside the curly brackett being treated as known inhomogeneous terms. Upon iterating Eq. (4.G.6) and majorizing through techniques similar to those leading to (4.F.3), a bound for $\mid \nabla_{\bar{k}_1} \tilde{s}_2 \mid$ is easily obtained. Finally, by applying $\nabla_{\bar{k}_1}$ to Eq. (4.F.1) and using the bounds previously discussed, one proves directly the result *d*6) in subsection 4.C of [*1*] for $s_2, n_1 = n_2 = 0$, $n_3 = 1$. Analogous methods establish the result *d*) for higher-order derivatives of $s_2$, in full generality and for $s_1$. For brevity, we shall omit details.

## 5. MAJORATION OF $s_3$ (I): THE IRREDUCIBLE PART, $s_{3,1\pi}$

### 5.A. General properties and decomposition of $s_{3,1\pi}$.

Some important remarks are:

1) It suffices to consider those Feynman diagrams contributing to $s_3(\bar{k}_1\bar{k}_2; \bar{k}'_1\bar{k}'_2)$ where the boson with threemomentum $\bar{k}'_2$ is absorbed by the nucleon before the one with $\bar{k}'_1$, a prescription to which we shall adhere throughout our study (see Figure 3). One has:

$$\int d^3\bar{k}'_1 d^3\bar{k}'_2 . s_3(\bar{k}_1\bar{k}_2; \bar{k}'_1\bar{k}'_2) . d^{(0)}(\bar{k}'_1\bar{k}'_2) = \int d^3\bar{k}'_1 d^3\bar{k}'_2 s_3(\bar{k}_1\bar{k}_2; \bar{k}'_2\bar{k}'_1) . d^{(0)}(\bar{k}'_1\bar{k}'_2)$$

formally, if $d^{(0)}(\bar{k}'_1\bar{k}'_2) = d^{(0)}(\bar{k}'_2\bar{k}'_1)$ (recall the second Eq. (4.A.3) in [*1*]).

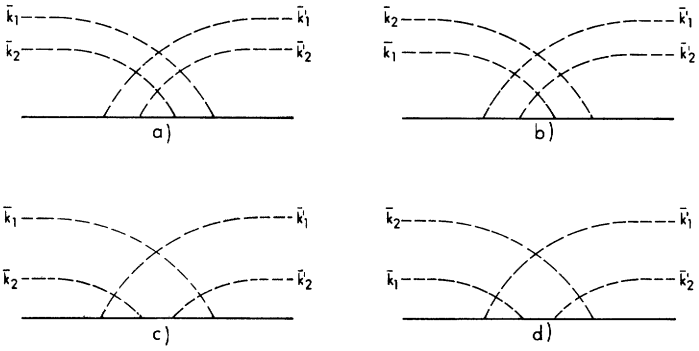


FIG. 3

Then, one has to exclude all Feynman diagrams where $\bar{k}'_1$ is absorbed before $\bar{k}'_2$, in order to avoid, consistently, double counting for $s_3(\bar{k}_1\bar{k}_2;\bar{k}'_1\bar{k}'_2)$, which has not to be symmetric under $\bar{k}'_1 \rightleftarrows \bar{k}'_2$.

2) $s_3(\bar{k}_1\bar{k}_2;\bar{k}'_1\bar{k}'_2)$ is symmetric under $\bar{k}_1 \rightleftarrows \bar{k}_2$, for given $\bar{k}'_1, \bar{k}'_2$. This follows from $\left[\mathbb{1} + \sum_{n=1}^{+\infty} \mathrm{W}^n\right].\mathrm{Y}_2^{(0)}$, as diagrams *a*) till *d*) in Figure 3 exemplify. In general, for any given diagram contributing to $s_3(\bar{k}_1\bar{k}_2;\bar{k}'_1\bar{k}'_2)$ (where, say, $\bar{k}_1$ is emitted before $\bar{k}_2$), there is necessarily another graph, also contributing to $s_3(\bar{k}_1\bar{k}_2;\bar{k}'_1\bar{k}'_2)$, which is obtained from the former by the replacements $\bar{k}_1 \rightleftarrows \bar{k}_2$ ($\bar{k}_2$ being, then, emitted before $\bar{k}_1$).

3) In any Feynman diagram contributing to $s_3(\bar{k}_1\bar{k}_2;\bar{k}'_1\bar{k}'_2)$, either none of the two outgoing boson lines crosses any of the incoming ones, or, if such crossings occur, one has four of them, at most (when each outgoing meson crosses both incoming ones). Thus, diagrams *a*), *b*) and *c*), *d*) in Figure 3 contain four and three crossings, respectively.

Let $s_{3,\mathrm{I}\pi}(\bar{k}_1\bar{k}_2;\bar{k}'_1\bar{k}'_2)$ be the sum of all different diagrams contributing to $s_3(\bar{k}_1\bar{k}_2;\bar{k}'_1\bar{k}'_2)$, each of which is two-meson irreducible. In figure 3, diagrams *a*) and *b*) contribute to $s_{3,\mathrm{I}\pi}$, but diagrams *c*) and *d*) do not. From the above remarks 2) and 3), one readily gets the following decomposition for $s_{3,\mathrm{I}\pi}(\bar{k}_1\bar{k}_2;\bar{k}'_1\bar{k}'_2)$, which generalizes (4.B.1):

$$s_{3,\mathrm{I}\pi}(\bar{k}_1\bar{k}_2;\bar{k}'_1\bar{k}'_2) = \sum_{j=0}^{4} \left[s_{3,\mathrm{I}\pi}^{(a,j)}(\bar{k}_1\bar{k}_2;\bar{k}'_1\bar{k}'_2) + s_{3,\mathrm{I}\pi}^{(b,j)}(\bar{k}_1\bar{k}_2;\bar{k}'_1\bar{k}'_2)\right] \quad (5.\mathrm{A}.1)$$

$s_{3,\mathrm{I}\pi}^{(a,j)}(s_{3,\mathrm{I}\pi}^{(b,j)})$ is the sum of all Feynman diagrams contributing to $s_{3,\mathrm{I}\pi}$ such that: *i*) the outgoing boson with threemomentum $\bar{k}_1$ is emitted before (after) the one with $\bar{k}_2$, *ii*) the total number of crossings of an incoming meson and an outgoing one is $j$, $0 \leqslant j \leqslant 4$ (for both $s_{3,\mathrm{I}\pi}^{(a,j)}$ and $s_{3,\mathrm{I}\pi}^{(b,j)}$). One has $s_{3,\mathrm{I}\pi}(\bar{k}_1\bar{k}_2;\bar{k}'_1\bar{k}'_2) = s_{3,\mathrm{I}\pi}(\bar{k}_2\bar{k}_1;\bar{k}'_1\bar{k}'_2)$. We shall concentrate in majorizing

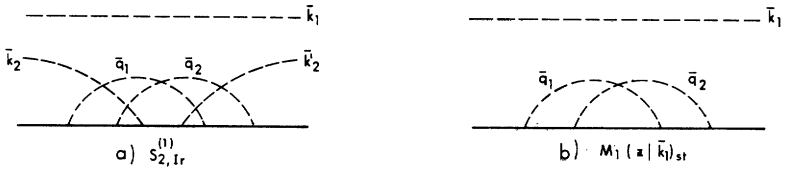


$s^{(a,j)}_{3,I\pi}$. The corresponding bounds for $s^{(b,j)}_{3,I\pi}$ will be obtained from those for $s^{(a,j)}_{3,I\pi}$ through the replacements $\bar{k}_1 \rightleftarrows \bar{k}_2$, at the end.

There is a basic property which is common to all $s^{(a,j)}_{3,I\pi}$ for $j = 1, 2, 3, 4$ (but is not shared by $s^{(a,0)}_{3,I\pi}$): for any Feynman diagram contributing to any of them, any vertical line cutting the nucleon line between the first and last vertices cuts also, at least, one of the four (outgoing and incoming) external lines. This fact enables one to majorize $s^{(a,j)}_{3,I\pi}$, $j = 1, 2, 3, 4$ by generalizing suitably the techniques used for $s^{(i)}_{2,I\pi}$ in section 4. For brevity, we shall give only the main arguments and the results in each case. We shall majorize $s^{(a,0)}_{3,I\pi}$ at the end, since it requires some what different techniques.

### 5.B. A bound for $s^{(a,1)}_{3,I\pi}(\bar{k}_1\bar{k}_2\,;\,\bar{k}'_1\bar{k}_2)$.

Diagram *a*) in Figure 5 displays a typical contribution to $s^{(a,1)}_{3,I\pi}$. Clearly, only the meson lines with three momenta $\bar{k}_1$ and $\bar{k}'_1$ cross in any diagram belonging to $s^{(a,1)}_{3,I\pi}$. Here, the key remarks are:

*i*) Upon deleting the four incoming and outgoing meson lines in a graph

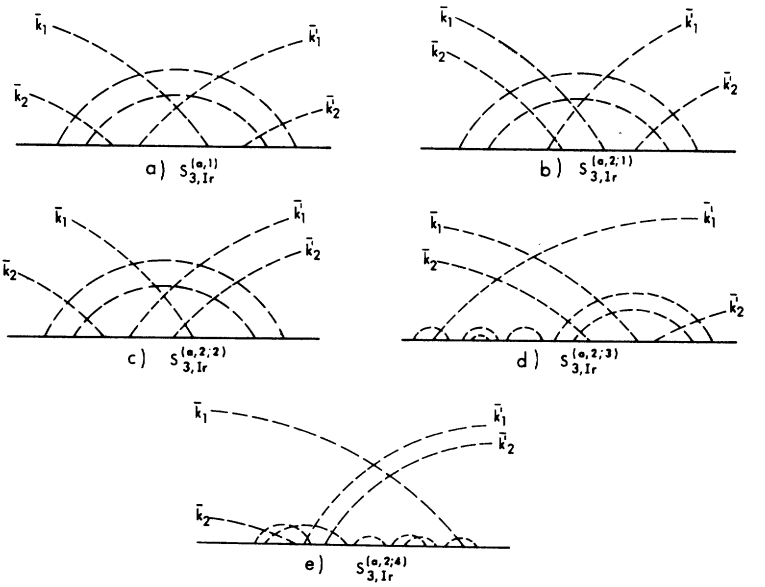


FIG. 5

of order $f^{2r+6}$ for $s^{(a,1)}_{3,\mathrm{I}\pi}$, one gets a contribution to the self-energy of the static nucleon, $\mathrm{M}_{\mathrm{st}}$, of order $f^{2r+2}$, with $r \geqslant 1$ (irreducibility excludes $r = 0$).

*ii*) In a given diagram for $\mathrm{M}(z)_{\mathrm{st}}$ of order $f^{2r+2}$, let us add, between the first and last vertices, the two incoming and the two outgoing bosons in the following ordering: 1) $\bar{k}'_2$ is absorbed, 2) $\bar{k}_1$ is emitted, 3) $\bar{k}'_1$ is absorbed, 4) $\bar{k}_2$ is emitted. The total number of new diagrams is $\binom{2r+4}{4}$ but, as in the case of $s^{(1)}_{2,\mathrm{I}\pi}$, not all the new graphs are allowed contributions to $s^{(a,1)}_{3,\mathrm{I}\pi}$, by virtue of irreducibility.

Generalizing the majorations leading to (4.C.3), one gets (to all orders in $f$):

$$\begin{aligned}
&|s^{(a,1)}_{3,\mathrm{I}\pi}(\bar{k}_1\bar{k}_2;\bar{k}'_1\bar{k}'_2)| \\
&\quad\leqslant \Lambda_3(\bar{k}_1\bar{k}_2;\bar{k}'_1\bar{k}'_2)\sum_{r=1}^{+\infty}\binom{2r+4}{4}u_r(z-\omega_0)_{\mathrm{st}} = \Lambda_3(\bar{k}_1\bar{k}_2;\bar{k}'_1\bar{k}'_2) \\
&\qquad\cdot\frac{1}{6}\left\{4f^8\frac{\partial^4}{\partial(f^2)^4}+28f^6\frac{\partial^3}{\partial(f^2)^3}+39f^4\frac{\partial^2}{\partial(f^2)^2}+6f^2\frac{\partial}{\partial(f^2)}\right\} \\
&\qquad\cdot\{[\tau_1(z-\omega_0)_{\mathrm{st}}]^2\cdot[\mathrm{Z}_1(z-\omega_0)_{\mathrm{st}}-1]\}
\end{aligned} \tag{5.B.1}$$

$$\begin{aligned}
&\Lambda_3(\bar{k}_1\bar{k}_2;\bar{k}'_1\bar{k}'_2) \\
&\quad= \frac{f^4\cdot|v(k_1)|\cdot|v(k'_1)|\cdot|v(k_2)|\cdot|v(k'_2)|}{|e_2(z,\bar{\pi};\bar{k}_1\bar{k}_2)|^{1/2}\cdot|e_2(z,\bar{\pi};\bar{k}'_1\bar{k}'_2)|^{1/2}}\cdot\frac{1}{(3\omega_0-z)^4}
\end{aligned} \tag{5.B.2}$$

$\tau_1(z-\omega_0)_{\mathrm{st}}$ and $\mathrm{Z}_1(z-\omega_0)_{\mathrm{st}}$ are given by Eqs. (2.B.6) and (2.B.8) in [*1*], with $e_n(\mathrm{E},\bar{\pi};\bar{k}_1\ldots\bar{k}_n) \to e_n(z-\omega_0;\bar{k}_1\ldots\bar{k}_n)_{\mathrm{st}}$. The argument $z-\omega_0$ comes, through the corresponding majorations, from the property stated at the end of subsection 5.A. This easily checked in diagram *a*) of Figure 5. Since $z-\omega_0 < \omega_0$, the right-hand-side of (5.B.1) is finite for suitably small $f$.

### 5.C. A bound for $s^{(a,2)}_{3,\mathrm{I}\pi}(\bar{k}_1\bar{k}_2;\bar{k}'_1\bar{k}'_2)$.

A diagrammatic analysis gives, to all orders in $f$:

$$s^{(a,2)}_{3,\mathrm{I}\pi}(\bar{k}_1\bar{k}_2;\bar{k}'_1\bar{k}'_2) = \sum_1^4 s^{(a,2;h)}_{3,\mathrm{I}\pi}(\bar{k}_1\bar{k}_2;\bar{k}'_1\bar{k}'_2) \tag{5.C.1}$$

$s^{(a,2;1)}_{3,\mathrm{I}\pi}(\bar{k}_1\bar{k}_2;\bar{k}'_1\bar{k}'_2)(s^{(a,2;2)}_{3,\mathrm{I}\pi}(\bar{k}_1\bar{k}_2;\bar{k}'_1\bar{k}'_2))$ is the sum of all Feynman graphs contributing to $s^{(a,2)}_{3,\mathrm{I}\pi}$, in each of which: *i*) the boson line with three momentum $\bar{k}'_1(\bar{k}_1)$ crosses those with $\bar{k}_1, \bar{k}_2(\bar{k}'_1, \bar{k}'_2)$, *ii*) any vertical line cutting the nucleon line between the first and last vertices also meets, at least, one internal (emitted and absorbed) meson line, besides the external ones.

Diagrams *b*) and *c*) belong to $s_{3,\mathrm{I}\pi}^{(a,2;1)}$ and $s_{3,\mathrm{I}\pi}^{(a,2;2)}$, respectively. It is not difficult to prove that $|s_{3,\mathrm{I}\pi}^{(a,2;1)}(\bar{k}_1\bar{k}_2;\bar{k}'_1\bar{k}'_2)|$ and $|s_{3,\mathrm{I}\pi}^{(a,2;2)}(\bar{k}_1\bar{k}_2;\bar{k}'_1\bar{k}'_2)|$ are separately bounded by the right-hand-side of (5.B.1). The required majoration techniques are the same as for

$$|s_{3,\mathrm{I}\pi}^{(a,1)}(\bar{k}_1\bar{k}_2;\bar{k}'_1\bar{k}'_2)|\,.\,s_{3,\mathrm{I}\pi}^{(a,2;3)}(\bar{k}_1\bar{k}_2;\bar{k}'_1\bar{k}'_2)(s_{3,\mathrm{I}\pi}^{(a,2;4)}(\bar{k}_1\bar{k}_2;\bar{k}'_1\bar{k}'_2))$$

is the sum of all graphs belonging to $s_{3,\mathrm{I}\pi}^{(a,2)}$, each of which fulfills: *i*) the line carrying three momentum $\bar{k}'_1(\bar{k}_1)$ cuts those with $\bar{k}_1, \bar{k}_2(\bar{k}'_1, \bar{k}'_2)$, *ii*) there is, at least, one vertical line cutting the nucleon one between the vertex where $\bar{k}'_1(\bar{k}'_2)$ is absorbed and the one where $\bar{k}_2(\bar{k}_1)$ is emitted which cuts only the external meson lines, but no internal one. Diagrams *d*) and *e*) in Figure 5 belong to $s_{3,\mathrm{I}\pi}^{(a,2;3)}$ and $s_{3,\mathrm{I}\pi}^{(a,2;4)}$, respectively, and display their generic structure. Recalling our study of $s_{2,\mathrm{I}\pi}^{(3)}$ in subsection 4.E, let us concentrate on $s_{3,\mathrm{I}\pi}^{(a,2;3)}$. As diagram *d*) in Figure 5 indicates, any graph for $s_{3,\mathrm{I}\pi}^{(a,2;3)}$ contains: *i*) $n \geqslant 0$ self-energy subdiagrams, each of which belongs to $\mathrm{M}(z\,|\,\bar{k}_1\bar{k}_2\bar{k}'_1)$, *ii*) a vertex part associated to the absorption of $\bar{k}'_1$, with two spectator bosons with three momenta $\bar{k}_1$, $\bar{k}_2$, to which our remarks in subsection 4.E apply (namely, a self-energy diagram with $2r + 2$ vertices, $r \geqslant 0$, originates $2r + 1$ different vertex parts), *iii*) a generalized vertex part corresponding to the absorption of $\bar{k}'_2$, followed by the emission of $\bar{k}_1$ and, later, of $\bar{k}_2$, with a boson spectator carrying $\bar{k}'_1$. Notice that a self-energy graph contributing to $\mathrm{M}(z\,|\,\bar{k}'_1)$ with $2r + 2$ vertices, $r \geqslant 1$, gives rise to $\binom{2r+3}{3}$ different generalized vertex subdiagrams of the above type *iii*) ($r = 0$ is excluded by irreducibility). Generalizing the derivation of (4.E.1), one arrives at (to all orders in $f$):

$$\begin{aligned}
|s_{3,\mathrm{I}\pi}^{(a,2;3)}(\bar{k}_1\bar{k}_2;\bar{k}'_1\bar{k}'_2)| &\leqslant \Lambda_3(\bar{k}_1\bar{k}_2;\bar{k}'_1\bar{k}'_2).\Lambda_2(\bar{k}_1\bar{k}_2;\bar{k}'_1) \\
&\cdot\left\{1 + \frac{1}{\omega_{k_1} + \omega_{k_2} - z}\cdot\sum_{r=0}^{+\infty}(2r+1)u_r(\bar{k}_1\bar{k}_2)_{\mathrm{st}}\right\} \\
&\cdot\left\{\sum_{r=1}^{+\infty}\binom{2r+3}{3}u_r(\bar{k}'_1)_{\mathrm{st}}\right\} = \Lambda_3(\bar{k}_1\bar{k}_2;\bar{k}'_1\bar{k}'_2).\Lambda_2(\bar{k}_1\bar{k}_2;\bar{k}'_1).g_1(\bar{k}_1\bar{k}_2)_{\mathrm{st}} \\
&\cdot\frac{1}{3}\left\{\left[4f^6\frac{\partial^3}{\partial(f^2)^3} + 12f^4\frac{\partial^2}{\partial(f^2)^2} + 3f^2\frac{\partial}{\partial(f^2)}\right]\right. \\
&\left.\cdot\,[\tau_1(\bar{k}'_1)\ {}^2_{\mathrm{st}}.(\mathrm{Z}_1(\bar{k}'_1)_{\mathrm{st}} - 1)]\right\} \qquad (5.\mathrm{C}.2)
\end{aligned}$$

The right-hand-side of (5.C.2), with the replacements $\bar{k}'_1 \rightleftarrows \bar{k}_1$, $\bar{k}'_2 \rightleftarrows \bar{k}_2$ majorizes $|s_{3,\mathrm{I}\pi}^{(a,2;4)}(\bar{k}_1\bar{k}_2;\bar{k}'_1\bar{k}'_2)|$.

### 5.D. A bound for $s_{3,\mathrm{I}\pi}^{(a,3)}(\bar{k}_1\bar{k}_2;\bar{k}'_1\bar{k}'_2)$.

The generalization of (5.C.1) for $s_{3,\mathrm{I}\pi}^{(a,3)}$ is, to all orders in $f$:

$$s_{3,\mathrm{I}\pi}^{(a,3)}(\bar{k}_1\bar{k}_2;\bar{k}'_1\bar{k}'_2) = \sum_{h=1}^{4} s_{3,\mathrm{I}\pi}^{(a,3;h)}(\bar{k}_1\bar{k}_2;\bar{k}'_1\bar{k}'_2) \tag{5.D.1}$$

In all diagrams contributing to $s_{3,\mathrm{I}\pi}^{(a,3)}$, $\bar{k}'_2$ crosses $\bar{k}_1$ and $\bar{k}'_1$ crosses both $\bar{k}_1$ and, later, $\bar{k}_2$: see Figure 6.

$s_{3,\mathrm{I}\pi}^{(a,3;1)}(\bar{k}_1\bar{k}_2;\bar{k}'_1\bar{k}'_2)$ is the sum of all graphs contributing to $s_{3,\mathrm{I}\pi}^{(a,3)}$ such that any vertical line cutting the nucleon line between the first and last vertices also cuts, at least, one internal (emitted and absorbed) internal boson line. Diagram *a*) in Figure 6 belongs to $s_{3,\mathrm{I}\pi}^{(a,3;1)}$. The latter is the three-crossing analogue of $s_{3,\mathrm{I}\pi}^{(a,1)}$ (one crossing) and $s_{3,\mathrm{I}\pi}^{(a,2;1)}$ (two crossings), as the comparison of diagram *a*) in Figure 6 and diagrams *a*) and *b*) in Figure 5 illustrates. Generalizing (5.B.1) and noticing that the $r = 0$ static self-energy diagram now contributes, one finds (to all orders in $f$):

$$\begin{aligned}
&|s_{3,\mathrm{I}\pi}^{(a,3;1)}(\bar{k}_1\bar{k}_2;\bar{k}'_1\bar{k}'_2)| \\
&\leqslant \Lambda_3(\bar{k}_1\bar{k}_2;\bar{k}'_1\bar{k}'_2).\sum_{r=0}^{+\infty}\binom{2r+4}{4}u_r(z-\omega_0)_{\mathrm{st}} = \Lambda_3(\bar{k}_1\bar{k}_2;\bar{k}'_1\bar{k}'_2) \\
&\quad .\frac{1}{6}\left\{4f^8\frac{\partial^4}{\partial(f^2)^4}+28f^6\frac{\partial^3}{\partial(f^2)^3}+39f^4\frac{\partial^2}{\partial(f^2)^2}+6f^2\frac{\partial}{\partial(f^2)}\right\} \\
&\quad .\{[\tau_1(z-\omega_0)_{\mathrm{st}}]^2.Z_1(z-\omega_0)_{\mathrm{st}}\}
\end{aligned} \tag{5.D.2}$$

$s_{3,\mathrm{I}\pi}^{(a,3;2)}(\bar{k}_1\bar{k}_2;\bar{k}'_1\bar{k}'_2)(s_{3,\mathrm{I}\pi}^{(a,3;3)}(\bar{k}_1\bar{k}_2;\bar{k}'_1\bar{k}'_2))$ is the sum of all graphs for $s_{3,\mathrm{I}\pi}^{(a,3)}$, for

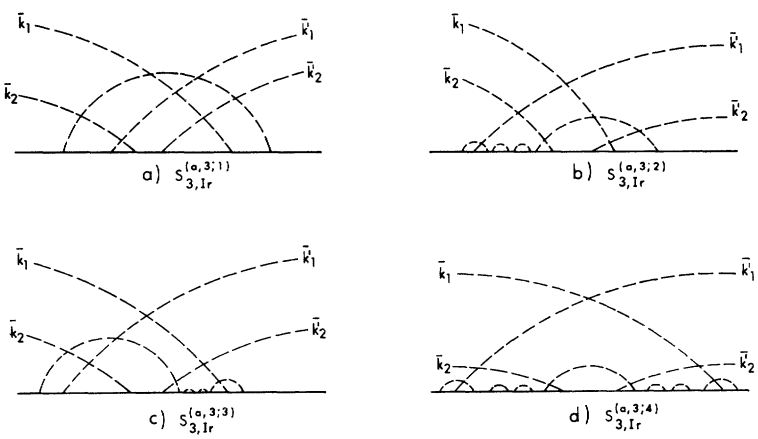


FIG. 6

each of which there is, at least, one vertical line cutting the nucleon line between the vertex where $\bar{k}_2(\bar{k}_1)$ is emitted and the one where $\bar{k}'_1(\bar{k}'_2)$ is absorbed, which cuts no internal (emitted and absorbed) boson line, but only the external ones. Diagrams *b*) and *c*) in Figure 6 are associated to $s^{(a,3;2)}_{3,\mathrm{I}\pi}$ and $s^{(a,3;3)}_{3,\mathrm{I}\pi}$, respectively. The majorations of $s^{(a,2;3)}_{3,\mathrm{I}\pi}$ in subsection 5.C can be directly extended to $s^{(a,3;2)}_{3,\mathrm{I}\pi}$, with the result (to all orders in $f$):

$$\left| s^{(a,3;2)}_{3,\mathrm{I}\pi}(\bar{k}_1\bar{k}_2;\bar{k}'_1\bar{k}'_2)\right| \leqslant \Lambda_3(\bar{k}_1\bar{k}_2;\bar{k}'_1\bar{k}'_2).\Lambda_2(\bar{k}_1\bar{k}_2;\bar{k}'_1).g_1(\bar{k}_1\bar{k}_2)_{\mathrm{st}}.g_2(\bar{k}'_1)_{\mathrm{st}} \tag{5.D.3}$$

$$g_2(\bar{k}'_1)_{\mathrm{st}} = \frac{1}{3}\left\{\left[4f^6\frac{\partial^3}{\partial(f^2)^3} + 12f^4\frac{\partial^2}{\partial(f^2)^2} + 3f^2\frac{\partial}{\partial(f^2)}\right] . \left[\tau_1(\bar{k}'_1)^2_{\mathrm{st}}.Z_1(\bar{k}'_1)_{\mathrm{st}}\right]\right\} \tag{5.D.4}$$

Notice that the $r = 0$ self-energy subdiagram associated to the generalized vertex part corresponding to the absorption of $\bar{k}'_2$ and emission of $\bar{k}_1$ and $\bar{k}_2$ (see diagram *b*) in Figure 6) is included in the right-hand-side of (5.D.3). The latter, with the substitutions $\bar{k}_1 \rightleftarrows \bar{k}'_1$, $\bar{k}_2 \rightleftarrows \bar{k}'_2$, also majorizes $\left| s^{(a,3;3)}_{3,\mathrm{I}\pi}(\bar{k}_1\bar{k}_2;\bar{k}'_1\bar{k}'_2)\right|$.

$s^{(a,3;4)}_{3,\mathrm{I}\pi}(\bar{k}_1\bar{k}_2;\bar{k}'_1\bar{k}'_2)$ is the sum of all graphs belonging to $s^{(a,3)}_{3,\mathrm{I}\pi}$ for each of which there are, at least, two vertical lines with the following properties: *i*) the first (second) line cuts the nucleon line between the vertex where $\bar{k}_2(\bar{k}_1)$ is emitted and the one where $\bar{k}'_1(\bar{k}'_2)$ is absorbed, *ii*) they only cross the external meson lines, but no internal (emitted and absorbed) one. Diagram *d*) in Figure 6 contributes to $s^{(a,3;4)}_{3,\mathrm{I}\pi}$. By generalizing directly the majorations for $s^{(a,2;3)}_{3,\mathrm{I}\pi}$ and $s^{(a,3;2)}_{3,\mathrm{I}\pi}$, one derives, to all orders in $f$:

$$\left| s^{(a,3;4)}_{3,\mathrm{I}\pi}(\bar{k}_1\bar{k}_2;\bar{k}'_1\bar{k}'_2)\right| \leqslant \Lambda_3(\bar{k}_1\bar{k}_2;\bar{k}'_1\bar{k}'_2).\Lambda_2(\bar{k}_1\bar{k}_2;\bar{k}'_1).\Lambda_2(\bar{k}_1\bar{k}'_1;\bar{k}'_2) .g_1(\bar{k}_1\bar{k}_2)_{\mathrm{st}}.g_1(\bar{k}'_1\bar{k}'_2)_{\mathrm{st}}.g_3(\bar{k}_1\bar{k}'_1)_{\mathrm{st}} \tag{5.D.5}$$

$$g_3(\bar{k}_1\bar{k}'_1)_{\mathrm{st}} = \left\{\left[2f^4\frac{\partial^2}{\partial(f^2)^2} + f^2\frac{\partial}{\partial(f^2)}\right].\left[\tau_1(\bar{k}_1\bar{k}'_1)^2_{\mathrm{st}}.Z_1(\bar{k}_1\bar{k}'_1)_{\mathrm{st}}\right]\right\} \tag{5.D.6}$$

### 5.E. A bound for $s^{(a,4)}_{3,\mathrm{I}\pi}(\bar{k}_1\bar{k}_2;\bar{k}'_1\bar{k}'_2)$.

The analogue of Eqs. (5.C.1) and (5.D.1) for $s^{(a,4)}_{3,\pi}$ is, to all orders in $f$:

$$s^{(a,4)}_{3,\mathrm{I}\pi}(\bar{k}_1\bar{k}_2;\bar{k}'_1\bar{k}'_2) = \sum_{h=1}^{8} s^{(a,4;h)}_{3,\mathrm{I}\pi}(\bar{k}_1\bar{k}_2;\bar{k}'_1\bar{k}'_2) \tag{5.E.1}$$

In any diagram contributing to $s^{(a,4)}_{3,\mathrm{I}\pi}$, each incoming boson line cuts each of the outgoing ones, so that there are four crossings (see Figure 7).

$$s^{(a,4;1)}_{3,\mathrm{I}\pi}(\bar{k}_1\bar{k}_2;\bar{k}'_1\bar{k}'_2)$$

is the sum of all diagrams for $s^{(a,4)}_{3,\mathrm{I}\pi}$ such that any vertical line cutting the nucleon line between the first and last vertices cuts, at least, one internal

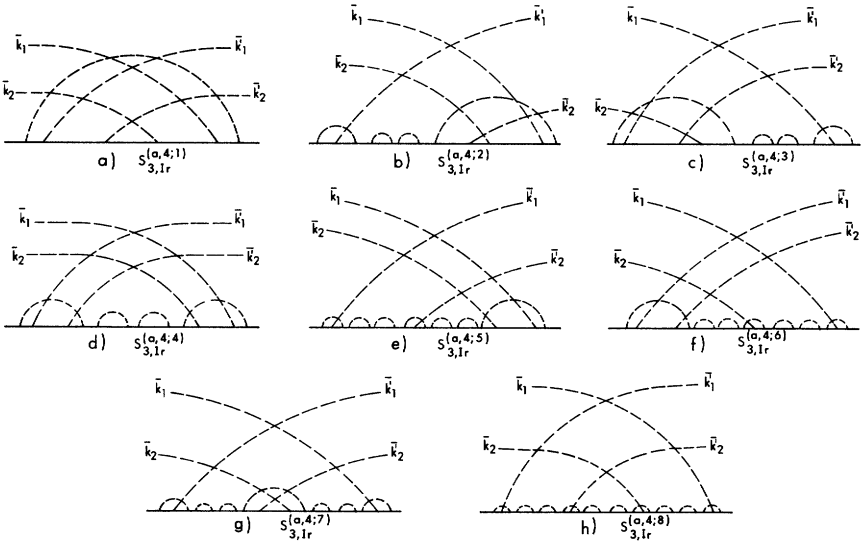


FIG. 7

boson line, besides the external ones. Thus, $s^{(a,4;1)}_{3,1\pi}$ is the four-crossing counterpart of $s^{(a,3;1)}_{3,1\pi}$. Diagram *a*) in Figure 7 is one contribution to $s^{(a,4;1)}_{3,1\pi}$. $|s^{(a,4;1)}_{3,1\pi}(\bar{k}_1\bar{k}_2;\bar{k}'_1\bar{k}'_2)|$ is also bounded by the right-hand-side of (5.D.2) (the proof being essentially the same).

$s^{(a,4;2)}_{3,1\pi}(\bar{k}_1\bar{k}_2;\bar{k}'_1\bar{k}'_2)(s^{(a,4;3)}_{3,1\pi}(\bar{k}_1\bar{k}_2;\bar{k}'_1\bar{k}'_2)$ and $s^{(a,4;4)}_{3,1\pi}(\bar{k}_1\bar{k}_2;\bar{k}'_1\bar{k}'_2))$ is the sum of all Feynman graphs for $s^{(a,4)}_{3,1\pi}$ for each of which there is, at least, one vertical line cutting the nucleon line between the corresponding to the absorption of $\bar{k}'_1$ and the emission of $\bar{k}_2$ (the absorption of $\bar{k}'_2$ and emission of $\bar{k}_1$, for $s^{(a,4;3)}_{3,1\pi}$; the absorption of $\bar{k}'_2$ and the emission of $\bar{k}_2$, for $s^{(a,4;4)}_{3,1\pi}$), which crosses no internal meson line, besides the external ones. Diagrams *b*), *c*) and *d*) in Figure 7 contribute to $s^{(a,4;2)}_{3,1\pi}$, $s^{(a,4;3)}_{3,1\pi}$ and $s^{(a,4;4)}_{3,1\pi}$, respectively. By extending the techniques used for $s^{(a,3;2)}_{3,1\pi}$ (compare both diagrams *b*) in Figures 6 and 7), one proves that $|s^{(a,4;2)}_{3,1\pi}(\bar{k}_1\bar{k}_2;\bar{k}'_1\bar{k}'_2)|$ is bounded by the right-hand-side of (5.D.3). Moreover, the latter, with the replacements $\bar{k}_1 \rightleftarrows \bar{k}'_1$, $\bar{k}_2 \rightleftarrows \bar{k}'_2$, also gives a bound for $|s^{(a,4;3)}_{3,1\pi}(\bar{k}_1\bar{k}_2;\bar{k}'_1\bar{k}'_2)|$ (compare diagrams *b*) and *c*) in Figure 7). Similar techniques imply that, to all orders in $f$:

$$|s^{(a,4;4)}_{3,1\pi}(\bar{k}_1\bar{k}_2;\bar{k}'_1\bar{k}'_2)| \leqslant \Lambda_3(\bar{k}_1\bar{k}_2;\bar{k}'_1\bar{k}'_2).\Lambda_4(\bar{k}_1\bar{k}_2;\bar{k}'_1\bar{k}'_2).g_3(\bar{k}_1\bar{k}_2)_{\mathrm{st}}.g_3(\bar{k}'_1\bar{k}'_2)_{\mathrm{st}} \quad (5.\mathrm{E}.2)$$

$$\Lambda_4(\bar{k}_1\bar{k}_2;\bar{k}'_1\bar{k}'_2) = \{1 - |e_4(z,\bar{\pi};\bar{k}_1\bar{k}_2\bar{k}'_1\bar{k}'_2)|^{-1}.\tau_1(\bar{k}_1\bar{k}_2\bar{k}'_1\bar{k}'_2)^2.Z_1(\bar{k}_1\bar{k}_2\bar{k}'_1\bar{k}'_2)\}^{-1} \quad (5.\mathrm{E}.3)$$

$\tau_1(\bar{k}_1\bar{k}_2\bar{k}'_1\bar{k}'_2)$ and $Z_1(\bar{k}_1\bar{k}_2\bar{k}'_1\bar{k}'_2)$ are given by the right-hand-sides of Eqs. (3.A.6-7), with $\bar{k}'_1 \ldots \bar{k}'_s$ replaced by $\bar{k}''_1 \ldots \bar{k}''_s$ and

$$e_{s+2}(z,\bar{\pi};\bar{k}'_1 \ldots \bar{k}'_s\bar{k}_1\bar{k}_2)$$

substituted by

$$e_{s+4}(z, \bar{\pi}; \bar{k}_1'' \ldots \bar{k}_s'' \bar{k}_1 \bar{k}_2 \bar{k}_1' \bar{k}_2').$$

$s_{3,1\pi}^{(a,4;5)}(\bar{k}_1\bar{k}_2 ; \bar{k}_1'\bar{k}_2')(s_{3,1\pi}^{(a,4;6)}(\bar{k}_1\bar{k}_2 ; \bar{k}_1'\bar{k}_2')$ and $s_{3,1\pi}^{(a,4;7)}(\bar{k}_1\bar{k}_2 ; \bar{k}_1'\bar{k}_2'))$ is the sum of all diagrams for each of which there are, at least, one vertical line between the vertices for emission of $\bar{k}_2$ and absorption of $\bar{k}_2'$ (emission of $\bar{k}_1$ and $\bar{k}_2$ for $s_{3,1\pi}^{(a,4;6)}$ and for $s_{3,1\pi}^{(a,4;7)}$) and another one between the vertices for absorption of $\bar{k}_1'$ and $\bar{k}_2'$ (absorption of $\bar{k}_2'$ and emission of $\bar{k}_2$ for $s_{3,1\pi}^{(a,4;6)}$; absorption of $\bar{k}_1'$ and $\bar{k}_2'$ for $s_{3,1\pi}^{(a,4;7)}$), both of which only cut the external meson lines, but no internal line. Diagrams *e*), *f*) and *g*) in Figure 7 contribute to $s_{3,1\pi}^{(a,4;5)}$, $s_{3,1\pi}^{(a,4;6)}$ and $s_{3,1\pi}^{(a,4;7)}$ respectively. As in previous cases, one proves, to all orders in $f$:

$$\left| s_{3,1\pi}^{(a,4;5)}(\bar{k}_1\bar{k}_2; \bar{k}_1'\bar{k}_2') \right| \leqslant \Lambda_3(\bar{k}_1\bar{k}_2; \bar{k}_1'\bar{k}_2') . \Lambda_2(\bar{k}_1\bar{k}_2; \bar{k}_1') . \Lambda_4(\bar{k}_1\bar{k}_2; \bar{k}_1'\bar{k}_2') \cdot g_1(\bar{k}_1\bar{k}_2)_{\mathrm{st}} . g_4(\bar{k}_1\bar{k}_2\bar{k}_1')_{\mathrm{st}} . g_3(\bar{k}_1'\bar{k}_2')_{\mathrm{st}} \quad (5.\mathrm{E}.4)$$

$$g_4(\bar{k}_1\bar{k}_2\bar{k}_1')_{\mathrm{st}} = 1 + \frac{1}{\omega_{k_1} + \omega_{k_2} + \omega_{k_1'} - z} . \left[ 2f^2 \frac{\partial}{\partial(f^2)} - 1 \right] \cdot \{ \tau_1(\bar{k}_1\bar{k}_2\bar{k}_1')_{\mathrm{st}}^2 . Z_1(\bar{k}_1\bar{k}_2\bar{k}_1')_{\mathrm{st}} \} \quad (5.\mathrm{E}.5)$$

$$\left| s_{3,1\pi}^{(a,4;7)}(\bar{k}_1\bar{k}_2; \bar{k}_1'\bar{k}_2') \right| \leqslant \Lambda_3(\bar{k}_1\bar{k}_2; \bar{k}_1'\bar{k}_2') . \Lambda_2(\bar{k}_1\bar{k}_2; \bar{k}_1') . \Lambda_2(\bar{k}_1\bar{k}_1'; \bar{k}_2') \cdot g_1(\bar{k}_1\bar{k}_2)_{\mathrm{st}} . g_1(\bar{k}_1'\bar{k}_2')_{\mathrm{st}} . g_3(\bar{k}_1\bar{k}_1')_{\mathrm{st}} \quad (5.\mathrm{E}.6)$$

$\tau_1(\bar{k}_1\bar{k}_2\bar{k}_1')_{\mathrm{st}}$ and $Z_1(\bar{k}_1\bar{k}_2\bar{k}_1')_{\mathrm{st}}$ being the obvious generalizations of (3.A.6-7). Clearly, upon replacing $\bar{k}_1 \rightleftarrows \bar{k}_1'$, $\bar{k}_2 \leftrightarrows \bar{k}_2'$ in the right-hand-side of (5.E.4), the latter becomes a bound for $\left| s_{3,1\pi}^{(a,4;6)}(\bar{k}_1\bar{k}_2; \bar{k}_1'\bar{k}_2') \right|$.

$s_{3,1\pi}^{(a,4;8)}(\bar{k}_1\bar{k}_2; \bar{k}_1'\bar{k}_2')$ is the sum of all Feynman diagrams for $s_{3,1\pi}^{(a,4)}$, in each of which there are, at least, three vertical lines between the vertices for emission of $\bar{k}_1$ and $\bar{k}_2$, for emission of $\bar{k}_2$ and absorption of $\bar{k}_2'$ and for absorption of $\bar{k}_1'$ and $\bar{k}_2'$, respectively, all of which cross no internal meson line, but only the external ones. Diagram *h*) in Figure 7 is a contribution to $s_{3,1\pi}^{(a,4;8)}$. The corresponding bound for $s_{3,1\pi}^{(a,4;8)}$, to all orders in $f$, is:

$$\left| s_{3,1\pi}^{(a,4;8)}(\bar{k}_1\bar{k}_2; \bar{k}_1'\bar{k}_2') \right| \leqslant \Lambda_3(\bar{k}_1\bar{k}_2; \bar{k}_1'\bar{k}_2') . \Lambda_2(\bar{k}_1\bar{k}_2; \bar{k}_1') . \Lambda_2(\bar{k}_1\bar{k}_1'; \bar{k}_2') . \Lambda_4(\bar{k}_1\bar{k}_2; \bar{k}_1'\bar{k}_2') \cdot g_1(\bar{k}_1\bar{k}_2)_{\mathrm{st}} . g_1(\bar{k}_1'\bar{k}_2')_{\mathrm{st}} . g_4(\bar{k}_1\bar{k}_2\bar{k}_1')_{\mathrm{st}} . g_4(\bar{k}_1\bar{k}_1'\bar{k}_2')_{\mathrm{st}} \quad (5.\mathrm{E}.7)$$

### 5.F. $s_{3,1\pi}^{(a,0)}(\bar{k}_1\bar{k}_2 ; \bar{k}_1'\bar{k}_2')$.

Diagram *a*) in Figure 8 shows a contribution to $s_{3,1\pi}^{(a,0)}(\bar{k}_1\bar{k}_2; \bar{k}_1'\bar{k}_2')$. Notice that by deleting the four external lines in it, one generates, the self-energy

diagram $b$) in Figure 8. The explicit contribution from diagram $a$) in Figure 8 is clearly majorized by

$$\Lambda_3(\bar{k}_1\bar{k}_2;\bar{k}'_1\bar{k}'_2) \cdot \int d^3\bar{q}_1 d^3\bar{q}_2 d^3\bar{q}_3 \frac{f^6 \,|\, v(q_1)\,|^2 \,.\, |\, v(q_2)\,|^2 \,.\, |\, v(q_3)\,|^2}{[2\omega_0 + |\, e_1(z;\bar{q}_1)\,|_{\mathrm{st}}] \,.\, |\, e_2(z;\bar{q}_1\bar{q}_2)_{\mathrm{st}}\,| \,.\, |\, e_3(z;\bar{q}_1\bar{q}_2\bar{q}_3)_{\mathrm{st}}\,|} \cdot \frac{1}{|\, e_2(z;\bar{q}_1\bar{q}_2)_{\mathrm{st}}\,| \,.\, [2\omega_0 + |\, e_1(z;\bar{q}_1)\,|_{\mathrm{st}}]} \tag{5.F.1}$$

The point is that the convergent triple integral multiplying $\Lambda_3$ is not the $f^6$-contribution to the self-energy of the static nucleon displayed in diagram $b$) of Figure 8, due to the non-singular factors $[2\omega_0 + |\, e_1(z;\bar{q}_1)\,|_{\mathrm{st}}]^{-1}$. If the latter is replaced by the singular factor $|\, e_1(z;\bar{q}_1)_{\mathrm{st}}\,|^{-1}$, such a triple integral does become formally the self-energy part associated to diagram $b$) in Figure 8, but it diverges. The same situation, namely, the unavoidable retention of $[2\omega_0 + |\, e_1(z;\bar{q}_1)\,|\,]^{-1}$ in order to have convergent bounds, will be faced for any higher order contribution to $s^{(a,0)}_{3,1\pi}$, as a similar analysis shows. We have been unable to devise another majoration technique which could give rise to bounds identifiable as convergent self-energy contributions. The origin of the trouble lies in what generically characterizes all diagrams contributing to $s^{(a,0)}_{3,1\pi}$, namely, the fact that the four external meson lines do not cross. Consequently, somewhat different techniques have to be used. The main steps in order to majorize $|\, s^{(a,0)}_{3,1\pi}\,|$ to all orders in $f$ are the following.

1) Let us consider the set of all simply irreducible graphs with $2r + 2$ vertices, $r \geqslant 0$, contributing formally to the self-energy $\mathrm{M}(z)_{\mathrm{st}}$ of the static nucleon without spectators (for instance, diagram $b$) in Figure 8), regarless of the fact that they may diverge when $\omega_0 < z < 2\omega_0$. To any of these

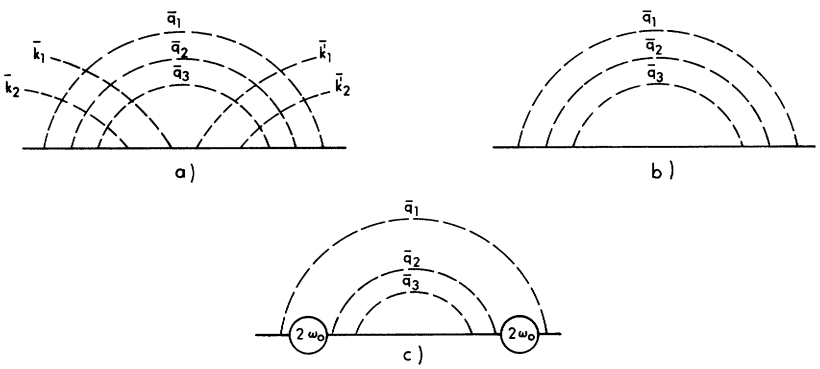


FIG. 8

self-energy diagrams, we associate a new one which has the same emitted and absorbed meson lines as the former, with only one difference: the factor corresponding to any intermediate state in it which has just one internal boson with generic three momentum $\bar{q}$ is $e_1(z\,;\bar{q})_{st} - 2\omega_0 = e_1(z - 2\omega_0\,;\bar{q})_{st}$. The factor associated to any intermediate state with $n \geqslant 2$ internal mesons with three momenta $\bar{q}_1 \ldots \bar{q}_n$ is $e_n(z;\bar{q}_1 \ldots \bar{q}_n)_{st}$, as always. Accordingly, the former self-energy graph is identical to the new diagram, except for the fact that we add to the latter a symbolic $2\omega_0$ to any intermediate state containing only one boson. Thus, diagram *c*) in Figure 8 is the new one associated to the self-part graph *b*) in Figure 8. We define $\Xi(z)_{st}$ as the sum of all contributions associated to the set of the new diagrams with $2\omega_0$'s. Clearly, the correspondence between the diagrams of this set and those for $M(z)_{st}$ is one-to-one. The expansion of $\Xi(z)_{st}$ in powers of $f$ for fixed $z$ is (compare with Eq. (3.A.2)):

$$\Xi(z)_{st} = -\sum_{r=0}^{+\infty} \Xi_r(z)_{st} \tag{5.F.2}$$

where $-\Xi_r(z)_{st}$ is the sum of all perturbative contributions of order $f^{2r+2}$ to $\Xi(z)_{st}$. Like $M_r(z \mid \bar{k}_1\bar{k}_2)$ in subsection 3.A, for $z$ real and less than $2\omega_0$, each $\Xi_r(z)_{st}$ is easily shown to be a positive sum of integrals, each of which has a positive integrand and, moreover, converges, precisely due to the replacements $e_1(z;\bar{q})_{st} \to e_1(z - 2\omega_0;\bar{q})_{st}$.

2) Let us consider the two following diagrammatic operations (similar to those discussed in subsection 4.C, when majorizing $|s^{(1)}_{2,1\pi}|$): *i*) if, in any given diagram belonging to $s^{(a,0)}_{3,1\pi}$, one deletes the four external boson lines and draws a $2\omega_0$ in each intermediate state containing only one internal boson line, one gets a graph contributing to $\Xi(z)_{st}$ *ii*) if, in any diagram with $2r + 2$ vertices, $r \geqslant 2$, for $\Xi(z)_{st}$, we add the four external bosons so that they do not cross ($\bar{k}'_2$ is absorbed first, and so is $\bar{k}'_1$ later; next $\bar{k}_1$ is emitted and, finally, $\bar{k}_2$ is created) in all possible ways, one generates $\binom{2r+4}{4}$ diagrams, but only part of them are allowed contributions to $s^{(a,0)}_{3,1\pi}$, due to irreducibility. From these operations, generalizing the arguments presented in subsection 4.C and since $\Xi_r(z)_{st}$ is a positive sum of integrals with positive integrands, one proves that, to all orders in $f$:

$$|s^{(a,0)}_{3,1\pi}(\bar{k}_1\bar{k}_2;\bar{k}'_1\bar{k}'_2)| \leqslant \Lambda_3(\bar{k}_1\bar{k}_2;\bar{k}'_1\bar{k}'_2).\Xi(z)'_{st} \tag{5.F.3}$$

$$\Xi(z)'_{st} = \sum_{r=2}^{+\infty} \binom{2r+4}{4} \Xi_r(z)_{st} \tag{5.F.4}$$

3) Like for $M(z \mid \bar{k}_1 \bar{k}_2)$ in subsection 3.A, there always exists a sequence of functions $\xi_n(\bar{q}_1 \ldots \bar{q}_n)$, $n \geqslant 1$, such that

$$\Xi(z)_{st} = f \cdot \int d^3\bar{q}_1 \frac{v(q_1)\xi_1(\bar{q}_1)}{|e_1(z - 2\omega_0; \bar{q}_1)_{st}|^{1/2}} \tag{5.F.5}$$

$$\xi_1(\bar{q}_1) = [e_1(z - 2\omega_0; \bar{q}_1)_{st}]^{-1/2} \cdot \left\{ f \cdot v(q_1)^* + f \cdot 2^{1/2} \cdot \int d^3\bar{q}_2 \frac{v(q_2) \cdot \xi_2(\bar{q}_1\bar{q}_2)}{|e_2(z; \bar{q}_1\bar{q}_2)_{st}|^{1/2}} \right\} \tag{5.F.6}$$

$$\xi_2(\bar{q}_1\bar{q}_2) = [e_2(z; \bar{q}_1\bar{q}_2)_{st}]^{-1/2} \cdot \left\{ \frac{f}{2^{1/2}} \cdot \sum_{i=1}^{2} v(q_i)^* \frac{\xi_1(\bar{q}_{j,j\neq i})}{|e_1(z - 2\omega_0; \bar{q}_j)_{st}|^{1/2}} + f \cdot 3^{1/2} \cdot \int d^3\bar{q}_3 \frac{v(q_3) \cdot \xi_3(\bar{q}_1\bar{q}_2\bar{q}_3)}{|e_3(z; \bar{q}_1\bar{q}_2\bar{q}_3)_{st}|^{1/2}} \right\} \tag{5.F.7}$$

$$\xi_n(\bar{q}_1 \ldots \bar{q}_n) = [e_n(z; \bar{q}_1 \ldots \bar{q}_n)_{st}]^{-1/2} \cdot \left\{ \frac{f}{n^{1/2}} \sum_{i=1}^{n} v(q_i)^* \cdot \frac{\xi_{n-1}(\bar{q}_1 \ldots \bar{q}_{i-1}\bar{q}_{i+1} \ldots \bar{q}_n)}{|e_{n-1}(z; \bar{q}_1 \ldots \bar{q}_{i-1}\bar{q}_{i+1} \ldots \bar{q}_n)_{st}|^{1/2}} + f \cdot (n+1)^{1/2} \int d^3\bar{q}_{n+1} \frac{v(q_{n+1}) \cdot \xi_{n+1}(\bar{q}_1 \ldots \bar{q}_n\bar{q}_{n+1})}{|e_{n+1}(z; \bar{q}_1 \ldots \bar{q}_n\bar{q}_{n+1})_{st}|^{1/2}} \right\} \tag{5.F.8}$$

In fact, by iterating formally all equations for $\xi_n$, $n \geqslant 1$, for fixed real $z = E_+ < 2\omega_0$ and plugging the resulting series for $\xi_1(\bar{q}_1)$ into the right-hand-side of Eq. (5.F.5), one generates just the perturbative series which defines $\Xi(z)_{st}$ out of $M(z)_{st}$, that is, Eq. (5.F.2). We are interested in majorizing $\sum_{r=2}^{+\infty} \Xi_r(z)_{st} = -\left[\Xi(z)_{st} + \sum_{r=0}^{1} \Xi_r(z)_{st}\right]$ for real $z = E_+ < 2\omega_0$, since this will lead to a bound for $|s_{3,1\pi}^{(a,0)}|$ as (5.F.3-4) suggest. By extending the techniques used in subsection 3.A to Eqs. (5.F.5-8), one gets:

$$\sum_{r=2}^{+\infty} \Xi_r(z)_{st} \leqslant [\tilde{\tau}_1(z)_{st}]^2 \cdot \{ [1 - (\tilde{\tau}_2(z)_{st})^2 \cdot Z_2(z)_{st}]^{-1} - 1 - [\tilde{\tau}_2(z)_{st}]^2 \} = \sum_{r=2}^{+\infty} \lambda_r(z) \tag{5.F.9}$$

$$\tilde{\tau}_1(z)_{st} = \left[ f^2 \int d^3\bar{q} \frac{|v(q)|^2}{|e_1(z - 2\omega_0; \bar{q})_{st}|} \right]^{1/2}$$
$$\tilde{\tau}_2(z)_{st} = \left[ \operatorname*{Max}_{\bar{q}_1} \frac{2f^2}{|e_1(z - 2\omega_0; \bar{q}_1)_{st}|} \cdot \int d^3\bar{q}_2 \frac{|v(q_2)|^2}{|e_2(z; \bar{q}_1\bar{q}_2)_{st}|} \right]^{1/2} \tag{5.F.10}$$

$Z_2(z)_{st}$ is given by the right-hand-side of Eq. (2.B.8) of [1] for $n = 2$ with $\tau_n$ replaced by

$$\tau_{n,st} = \left[ \operatorname*{Max}_{\bar{q}_1 \ldots \bar{q}_{n-1}} \frac{f^2 . n}{| e_{n-1}(z; \bar{q}_1 \ldots \bar{q}_{n-1})_{st} |} \cdot \int d^3\bar{q}_n . | v(q_n) |^2 \cdot \frac{1}{| e_n(z; \bar{q}_1 \ldots \bar{q}_{n-1}\bar{q}_n)_{st} |} \right]^{1/2} .$$

In turn, $\lambda_r(z)$ is the sum of all positive terms of order $f^{2r+2}$, $r \geqslant 2$, which result if $(\tilde{\tau}_{1,st})^2 . [(1 - (\tilde{\tau}_{2,st})^2 . Z_{2,st})^{-1} - 1 - (\tilde{\tau}_{2,st})^2]$ is expanded as a power series in $f$, for fixed $z$. Like for $M_r(z \mid \bar{k}_1\bar{k}_2)$ in subsection 3.A, one can prove, order by order, that

$$\Xi_r(z)_{st} \leqslant \lambda_r(z) \tag{5.F.11}$$

4) Finally, by considering Eq. (5.F.4), using (5.F.11), replacing $\binom{2r+4}{4} . \lambda_r(z)$ by suitable differentiations of $\lambda_r(z)$ with respect to $f^2$ and using Eq. (5.F.9) in order to sum $\sum_{r=2}^{+\infty} \lambda_r(z)$, one arrives at

$$\Xi(z)'_{st} \leqslant \frac{1}{6} \left\{ 4f^8 \frac{\partial^4}{\partial(f^2)^4} + 28f^6 . \frac{\partial^3}{\partial(f^2)^3} + 39f^4 . \frac{\partial^2}{\partial(f^2)^2} + 6f^2 \frac{\partial}{\partial(f^2)} \right\} . \{ [\tilde{\tau}_1(z)_{st}]^2 . [(1 - (\tilde{\tau}_2(z)_{st})^2 . Z_2(z)_{st})^{-1} - 1 - (\tilde{\tau}_2(z)_{st})^2] \} \tag{5.F.12}$$

(5.F.3) and (5.F.12) give the desired bound for $| s^{(a,0)}_{3,I\pi}(\bar{k}_1\bar{k}_2; \bar{k}'_1\bar{k}'_2) |$. Clearly, by replacing $\bar{k}_1 \rightleftarrows \bar{k}_2$ in the bounds obtained above for each

$$| s^{(a,j)}_{3,I\pi}(\bar{k}_1\bar{k}_2; \bar{k}'_1\bar{k}'_2) | ,$$

one gets the corresponding bounds for

$$| s^{(b,j)}_{3,I\pi}(\bar{k}_1\bar{k}_2; \bar{k}'_1\bar{k}'_2) |$$

for $j = 0, 1, 2, 3, 4$. All these bounds give, by direct majoration of (5.A.1), a bound for $| s_{3,I\pi} |$.

## 6. MAJORATION OF $s_3$ (II): $s_3$ IN TERMS OF $s_{3,I\pi}$

To end, we turn to $s_3(\bar{k}_1\bar{k}_2; \bar{k}'_1\bar{k}'_2)$. Any diagram associated to it and excluded from $s_{3,I\pi}$, can always be decomposed, by means of vertical lines which cut the nucleon line and only two meson lines, into two or more subdiagrams which belong to either $s_{3,I\pi}$, or $s_0$ or $\tilde{s}_2$ (recall subsection 4.F) or the ana-

logue of the latter for $s_1$, namely $\tilde{s}_1$. These facts and a diagrammatic analysis imply that, to all orders in $f$:

$$s_3(\bar{k}_1\bar{k}_2;\bar{k}'_1\bar{k}'_2) = s_0(\bar{k}_1\bar{k}_2).\{s_{3,\mathrm{I}\pi}(\bar{k}_1\bar{k}_2;\bar{k}'_1\bar{k}'_2) + \tilde{s}_{1,2}(\bar{k}_1\bar{k}_2;\bar{k}'_1\bar{k}'_2) + \tilde{s}_{1,2;3}(\bar{k}_1\bar{k}_2;\bar{k}'_1\bar{k}'_2)\}.s_0(\bar{k}'_1\bar{k}'_2) \quad (6.1)$$

Eq. (6.1) is the generalization of Eq. (4.F.1). In it: *i)* $s_0(\bar{k}_1\bar{k}_2)(s_0(\bar{k}'_1\bar{k}'_2))$ takes into account all possible nucleon self-energy subdiagrams where the outgoing (incoming) mesons with three momenta $\bar{k}_1, \bar{k}_2(\bar{k}'_1, \bar{k}'_2)$ are spectators, *ii)* $s_0.\tilde{s}_{1,2}.s_0$ is the sum of all reducible diagrams contributing to $s_3$ which are obtained by iterations of $s_0$, $\tilde{s}_1$ and $\tilde{s}_2$ only, so that they do not contain any subdiagram belonging to $s_{3,\mathrm{I}\pi}$, *iii)* $s_0\tilde{s}_{1,2;3}s_0$ is the sum of all reducible diagrams excluded from $s_0(s_{3,\mathrm{I}\pi} + \tilde{s}_{1,2})s_0$, so that they contain, at least, one subdiagram belonging to $s_{3,\mathrm{I}\pi}$ and, at least, another one associated to either $\tilde{s}_1$ or $\tilde{s}_2$. One can sum the set of all Feynman diagrams for $\tilde{s}_{1,2}$ and $\tilde{s}_{1,2;3}$ into two suitable sets of linear and non-singular integral equations, which generalize Eq. (4.F.2), by borrowing techniques of multiparticle scattering theory [5].

The two basic sets are, successively

*a)*
$$\tilde{s}_{1,2}(\bar{k}_1\bar{k}_2;\bar{k}'_1\bar{k}'_2) = \sum_{i=1}^{2} v^{(i)}_{1,2}(\bar{k}_1\bar{k}_2;\bar{k}'_1\bar{k}'_2) = \sum_{i=1}^{2} v^{(i)}_{1,2} \quad (6.2)$$

$$\begin{pmatrix} v^{(1)}_{1,2} \\ v^{(2)}_{1,2} \end{pmatrix} = \begin{pmatrix} \tilde{s}_1.s_0.\tilde{s}_2 \\ \tilde{s}_2.s_0.\tilde{s}_1 \end{pmatrix} + \begin{pmatrix} 0 & \tilde{s}_1.s_0 \\ \tilde{s}_2.s_0 & 0 \end{pmatrix}.\begin{pmatrix} v^{(1)}_{1,2} \\ v^{(2)}_{1,2} \end{pmatrix} \quad (6.3)$$

*b)*
$$\tilde{s}_{1,2;3}(\bar{k}_1\bar{k}_2;\bar{k}'_1\bar{k}'_2) = \sum_{i=1}^{2} v^{(i)}_{1,2;3}(\bar{k}_1\bar{k}_2;\bar{k}'_1\bar{k}'_2) = \sum_{i=1}^{2} v^{(i)}_{1,2;3} \quad (6.4)$$

$$\begin{pmatrix} v^{(1)}_{1,2;3} \\ v^{(2)}_{1,2;3} \end{pmatrix} = \begin{pmatrix} s_{3,\mathrm{I}\pi}.s_0.(\tilde{s}_1 + \tilde{s}_2 + \tilde{s}_{1,2}) \\ (\tilde{s}_1 + \tilde{s}_2 + \tilde{s}_{1,2}).s_0.s_{3,\mathrm{I}\pi} \end{pmatrix} + \begin{pmatrix} 0 & s_{3,\mathrm{I}\pi}.s_0 \\ (\tilde{s}_1 + \tilde{s}_2 + \tilde{s}_{1,2}).s_0 & 0 \end{pmatrix}.\begin{pmatrix} v^{(1)}_{1,2;3} \\ v^{(2)}_{1,2;3} \end{pmatrix} \quad (6.5)$$

Notice that the solutions of Eq. (6.3) occur, via Eq. (6.2), in the inhomogeneous terms and the kernels of Eq. (6.5). In Eqs. (6.3) and (6.5), symbolic notation was used, whose meaning is the following:

$$\tilde{s}_1.s_0.\tilde{s}_2 \to \tilde{s}_1(\bar{k}_1\bar{k}_2;\bar{k}'_1).s_0(\bar{k}'_1\bar{k}_2).\tilde{s}_2(\bar{k}'_1\bar{k}_2;\bar{k}'_2);$$

$$\tilde{s}_1.s_0.v^{(2)}_{1,2} \to \int d^3\bar{k}''_1\tilde{s}_1(\bar{k}_1\bar{k}_2;\bar{k}''_1).s_0(\bar{k}''_1\bar{k}_2).v^{(2)}_{1,2}(\bar{k}''_1\bar{k}_2;\bar{k}'_1\bar{k}'_2)$$

$$s_{3,\mathrm{I}\pi}.s_0.\tilde{s}_1 \to \int d^3\bar{k}''_1 s_{3,\mathrm{I}\pi}(\bar{k}_1\bar{k}_2;\bar{k}''_1\bar{k}'_2).s_0(\bar{k}''_1\bar{k}'_2).\tilde{s}_1(\bar{k}''_1\bar{k}'_2;\bar{k}'_1);$$

$$\tilde{s}_{1,2}.s_0.v^{(2)}_{1,2;3} \to \int d^3\bar{k}''_1 d^3\bar{k}''_2\tilde{s}_{1,2}(\bar{k}_1\bar{k}_2;\bar{k}''_1\bar{k}''_2).s_0(\bar{k}''_1\bar{k}''_2).v^{(2)}_{1,2;3}(\bar{k}''_1\bar{k}''_2;\bar{k}'_1\bar{k}'_2)$$

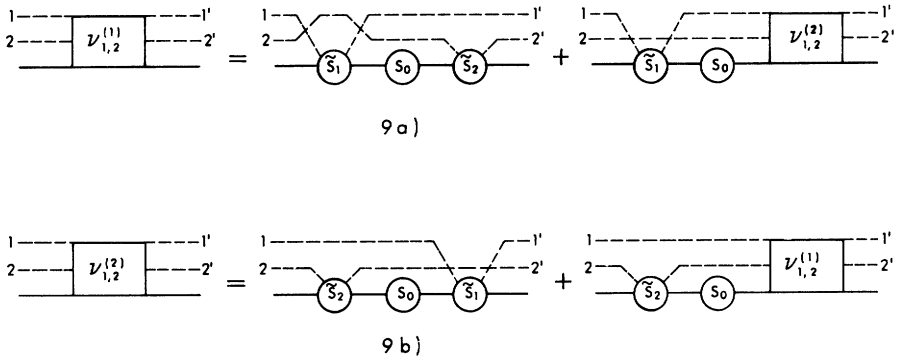


FIG. 9

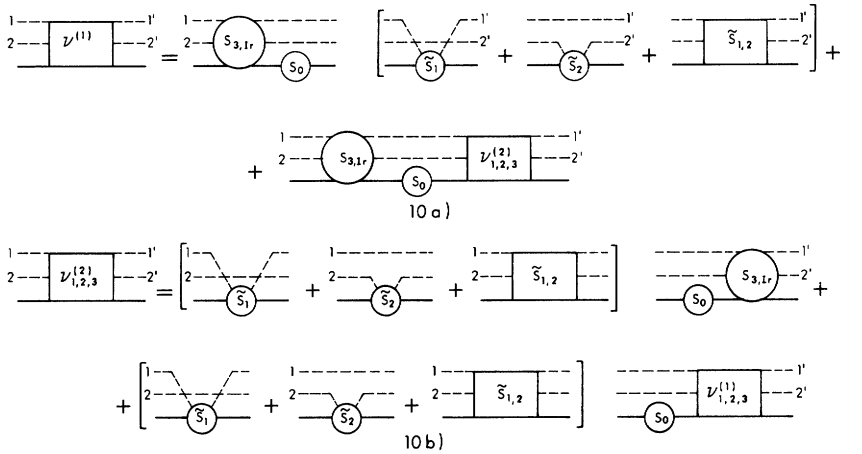


FIG. 10

and so on for the others. By paying attention to the subscripts of each kernel and recalling the definition of the latter, one clearly sees which three momenta are fixed and which ones should be integrated over, then writing down the explicit forms of the symbolic equations (6.3) and (6.5). Figures 9*a*) and 9*b*) (10*a*) and 10*b*)) give a useful diagrammatic interpretation of the two coupled equations (6.3) ((6.5)). Notice that $s_0$, $s_{3,\mathrm{I}\pi}$, $\tilde{s}_1$ and $\tilde{s}_2$ are all represented by circles, while $v^{(i)}_{1,2}$, $\tilde{s}_{1,2}$ and $v^{(i)}_{1,2;3}$ are represented by square boxes. It is not difficult to prove that Eqs. (6.1-2), (6.4) together with the series formed by all possible iterations of (6.3) and, then, of (6.5) generate all possible Feynman diagrams contributing to $s_3$. The proof becomes simpler by using the diagrammatic representation of Figures 9*a*), 9*b*), 10*a*) and 10*b*).

For brevity, we shall omit it. Upon iterating (6.3) and majorizing as in subsection 4.F by using the known bounds on $|s_0|$, $|\tilde{s}_1|$ and $|\tilde{s}_2|$, explicit bounds are obtained on $|v^{(i)}_{1,2}|$, $i = 1, 2$. The latter, the known bound on $|s_{3,\mathrm{I}\pi}|$ and similar operations give rise to the corresponding bounds for $|v^{(i)}_{1,2;3}|$, $i = 1, 2$. All these, using Eqs. (6.4), (6.2) and (6.1), imply directly the result. *d*3) in subsection 4.C in [*1*]. By a suitable generalization of the techniques of subsection 4.C one proves the result *d*7) in subsection 4.C of [*1*] for $s_3$. The result *d*8) in subsection 4.C of [*1*] for all $s_i$, $i = 0, 1, 2, 3$ can be proved by observing that: *i*) it holds for each individual diagram, *ii*) the convergence of the corresponding series of Feynman contributions for each $s_i$, $i = 0, 1, 2, 3$, has been established along this paper. The detailed proofs of the last statements are direct but rather cumbersome and will be omitted. Finally, by approximating $s_{3,\mathrm{I}\pi}$ by a finite number of Feynman diagrams and $s_0$, $\tilde{s}_1$, $\tilde{s}_2$ as indicated at the end of subsection 4.F, replacing the kernels in the systems (6.3) and (6.5) by separable ones and solving the new resulting systems it is possible, in principle, to carry out an approximate determination of $s_3$.

## 7. INCLUSION OF INTERNAL DEGREES OF FREEDOM

Our construction of the elastic scattering state can be extended to include spin and isospin dependences and, hence, to the usual and physically interesting models for low energy pion-nucleon scattering (see references 6-7 in [*1*]). To illustrate this simply, let us assume that: *i*) the recoiling nucleon and the meson have isospins 1/2 and 1 respectively (spin dependence being disregarded), *ii*) $\mathrm{H_I}$ in Eq. (2.A.2) of [*1*] is replaced by

$$\mathrm{H}'_{\mathrm{I}} = f \int d^3\bar{k} \sum_{j=1}^{3} \sigma_j [v(k).a(\bar{k}, j).\exp i\bar{k}\bar{x} + v(k)^* a^+(\bar{k}, j) \exp(-i\bar{k}\bar{x})] \quad (7.1)$$

$j$ being the meson isospin index and $\sigma_j$ denoting here the isospin Pauli matrices. Upon trying to extend our previous construction to this case, tricky point could arise when majorizing the analogue of $|s^{(1)}_{2,\mathrm{I}\pi}|$ in terms of static self-energies (recall subsection 4.C). However, since

$$\left|\left(x_1, \sum_{j=1}^{3} \sigma_j \sigma_i \sigma_k \sigma_j x_2\right)\right| \leqslant 3, \quad \left|\left(x_1, \sum_{j_1=1}^{3} \sum_{j_2=1}^{3} \sigma_{j_1} \sigma_i \sigma_{j_2} \sigma_k \sigma_{j_1} \sigma_{j_2} x_2\right)\right| \leqslant 3^2$$

etc., for any normalized Pauli bispinors $x_1$, $x_2$ for the nucleon, the analogues of steps 2), 3) and 4) of subsection 4.C also hold in the actual case. Then, the counterpart of $|s^{(1)}_{2,\mathrm{I}\pi}|$ can indeed be majorized in terms of $\tau$'s and Z's for a related static model without isospin dependence, with a new coupling

constant, namely, $f' = 3^{1/2}.f$. Similarly, the generalization of the bound in subsection 4.E also holds, but $\tau_1$, $Z_1$ in (4.E.2) refer now to a static model with $f' = 3^{1/2}.f$ and no isospin dependence and so on for all other bounds. A detailed analytic and numerical study of the dressed one-nucleon state in the Chew-Low model for the low-energy pion-nucleon interaction (see references 6-7 in [*1*]), with spin, isospin and nucleon recoil has been carried out recently [*6*] : upon combining such an analysis and the methods presented in this work, it is possible to construct rigorously the elastic scattering state for this model as well.

## REFERENCES

[*1*] R. F. ALVAREZ-ESTRADA, *Rigorous Approach to Elastic Meson-Nucleon Scattering in Non-Relativistic Quantum Field Theory (I) : Integral Equation and Schrodinger Ket*, Departamento de Física Teórica, Universidad Complutense, Madrid-3, 1980.

[*2*] K. SYMANZIK, *J. Math. Phys.*, t. **1**, 1960, p. 249.

[*3*] J. BROS and M. LASSALLE, *Ann. Inst. Henri Poincaré*, t. **27**, 1977, p. 279.

[*4*] H. KOCH, *Irreducible Kernels and Bound States* in $\lambda P(\varphi)_2$ *Models*, Université de Genève, UGVA-DPT, 1979/06-197.

[*5*] L. D. FADDEEV, *Soviet Physics JETP*, t. **12**, 1961, p. 1014.

[*6*] A. MUÑOZ SUDUPE, *Dressing of a Nucleon by Meson Clouds*, Graduate Dissertation, Facultad de Ciencias Físicas, Universidad Complutense de Madrid, november 1979.

*(Manuscrit reçu le 28 avril 1980)*